SECTION 4

Note!
Unless otherwise noted, listed Wheels and Brakes are FAA TSO C26 Approved.
For a product to be TSO qualified, it has to have successfully demonstrated its ability to meet minimum performance standards in accordance with FAA recognized rating methods. The TSO approval of a product does not constitute installation approval or applicability on an FAA Type Certificated Aircraft. It is the responsibility of those installing these products to determine that the aircraft installation and its wheel and brake performance requirements are compatible for the TSO ratings of the wheel and brake. TSO approved products must have separate approval for installation in a FAA type certificated aircraft. TSO Approved Products may be installed only if performed under Title 14 CFR Part 43 or the applicable airworthiness requirements.

30-4 4-7
30-5 4-7
30-6 4-7
30-7 4-7
30-9 4-5
30-9A 4-5
30-9C 4-5
30-9D 4-5
30-9E 4-5
30-18 4-9
30-19 4-9
30-19A 4-9
30-21 4-23
30-23 4-33
30-23A 4-33
30-23B 4-33
30-23C 4-33
30-23D 4-33
30-24 4-23
30-28B 4-55
30-28C 4-55
30-28D 4-55
30-30 4-11
30-31 4-87
30-32 4-25
30-32A 4-25
30-32B 4-25
30-32C 4-25
30-32E 4-25
30-35 4-23
30-40 4-9
30-40A 4-9
30-41 4-23
30-41A 4-23
30-41B 4-23
30-45 4-9
30-51 4-23
30-51A 4-23
30-51B 4-23
30-52 4-27
30-52A 4-27
30-52B 4-27
30-52D 4-27
30-52E 4-27
30-52F 4-27
30-52G 4-27
30-52H 4-27
30-52K 4-27
30-52L 4-27
30-52M 4-27
30-52N 4-27
30-52P 4-28
30-52Q 4-28
30-52S 4-28
30-52T 4-28
30-52U 4-28
30-52V 4-28
30-52W 4-28
30-52X 4-28
30-52Y 4-28
30-52Z 4-28
30-52AA 4-28
30-52AB 4-28
30-52AC 4-28
30-53 4-13
30-53A 4-13
30-54 4-31
30-54A 4-31
30-54B 4-31
30-54C 4-31
30-55 4-11
30-55B 4-11
30-56 4-15
30-56A 4-15
30-56B 4-15
30-56C 4-15
30-56D 4-15
30-56F 4-15
30-58A 4-31
30-58B 4-31
30-59 4-13
30-59A 4-13
30-59D 4-13
30-59E 4-13
30-60 4-23
30-60A 4-23
30-60B 4-23
30-61 4-31
30-61A 4-34
30-61B 4-34
30-61D 4-31
30-61E 4-31
30-61F 4-31
30-63 4-15
30-63A 4-15
30-63B 4-15
30-63D 4-15
30-63E 4-15
30-63F 4-15
30-63J 4-15
30-63K 4-15
30-63M 4-15
30-63P 4-15
30-63Q 4-15
30-63S 4-15
30-65 4-31
30-65A 4-31
30-65E 4-31
30-66 4-42
30-66A 4-41
30-66B 4-41
30-66C 4-42
30-66D 4-42
30-66F 4-42
30-66G 4-42
30-66H 4-42
30-67 4-51
30-67A 4-51
30-67B 4-51
30-67C 4-51
30-67D 4-51
30-67E 4-63
30-67X 4-51
30-68 4-55
30-68A 4-55
30-68B 4-55
30-69A 4-42
30-69B 4-42
30-74B 4-42
30-75 4-16
30-75A 4-16
30-75B 4-16
30-75X 4-16
30-79 4-11
30-79A 4-11
30-79B 4-11
30-83 4-34
30-83A 4-34
30-84 4-57
30-88 4-46
30-89 4-53
30-89A 4-53
30-89B 4-53
30-89C 4-53
30-89E 4-53
30-91 4-89
30-93 4-45
30-93A 4-45
30-93B 4-45
30-93C 4-45
30-93D 4-45
30-93E 4-45
30-94 4-57
30-95 4-59
30-95A 4-59
30-95B 4-59

30-96 4-40
30-97 4-60
30-98 4-70
30-98A 4-70
30-98B 4-70
30-98C 4-70
30-98D 4-70
30-99 4-59
30-100 4-59
30-103 4-89
30-106 4-73
30-107 4-65
30-107A 4-65
30-107B 4-65
30-107C 4-66
30-107D 4-66
30-107E 4-66
30-111 4-57
30-113 4-60
30-113A 4-60
30-123 4-71
30-127 4-35
30-127A 4-35
30-127C 4-35
30-127D 4-35
30-129 4-36
30-131 4-61
30-133 4-6
30-138 4-71
30-139 4-40
30-141 4-68
30-142 4-68
30-143 4-56
30-144 4-69
30-144A 4-69
30-144B 4-69
30-145 4-45
30-146 4-49
30-146A 4-49
30-148 4-89
30-149 4-72
30-150 4-82
30-154A 4-78
30-154B 4-78
30-158 4-73
30-159 4-65
30-159A 4-65
30-159B 4-66
30-159C 4-66
30-161 4-85
30-161A 4-85
30-162 4-80
30-163 4-62
30-164 4-6
30-165 LH 4-77
30-165 RH 4-77
30-170 4-74
30-176 4-51
30-181A 4-5
30-182 4-62
30-184 LH 4-57
30-184 RH 4-57
30-189 4-85
30-189A 4-85
030-18902 4-85
30-191 4-79
30-195 4-51
30-204 4-81
30-204A 4-81
30-208 4-76
30-208A 4-76
30-210 4-75
30-210A 4-75
30-214 4-11
30-214B 4-11
30-220 4-49
30-224 4-11
30-231 4-72
30-233 4-36
30-233A 4-36
30-233B 4-36
30-236 4-17
30-239 4-18
30-239A 4-18
30-239B 4-18
30-241 4-37
30-308 4-5
35-200A (30-1) 4-7
37-200-2 (30-8) 4-39
37-200A (30-72) 4-39
3000-250 (30-12) 4-21
3000-500 (30-13) 4-21
C2000 (30-2) 4-3
C7000 (30-3) 4-4
C7000A (30-3A) 4-4

McCauley Product Line

C-30018 4-19
C-30018-1 4-19
C-30018-2 4-19
C-30018-3 4-19
C-30018-4 4-19
C-30018-5 4-19
C-30018-6 4-19
C-30018-7 4-19
D-30118-3 4-32
D-30118-4 4-32
D-30118-5 4-32
D-30118-6 4-32
D-30118-7 4-32
D-30118-8 4-32
D-30118-9 4-32
D-30118-10 4-32
C-30764-5 4-20
C-30764-6 4-20
C-30764-7 4-20
D-30793-3 4-32
D-30793-4 4-32
D-30793-5 4-32
D-30793-6 4-32

C2000 (30-2)

Organic Lining

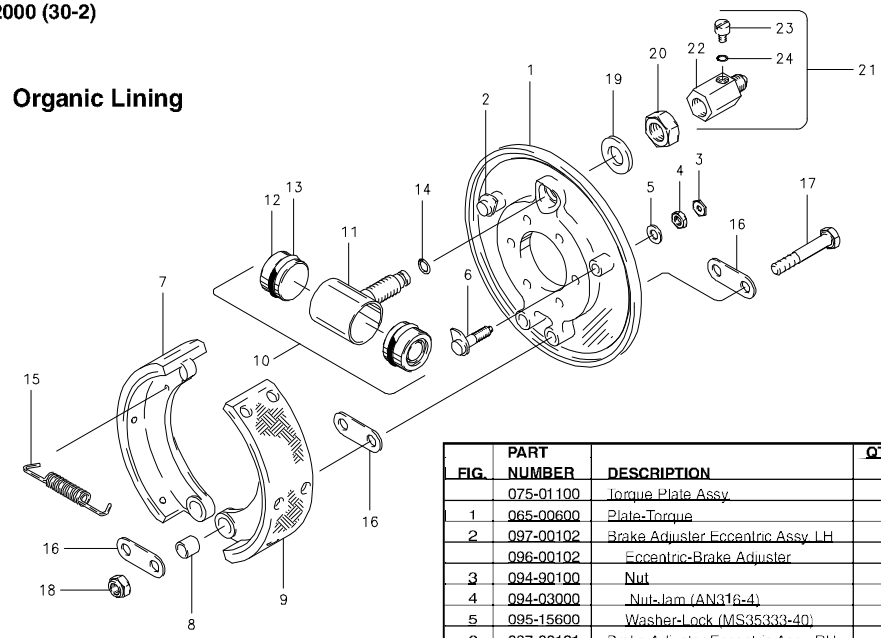

FIG.	PART NUMBER	DESCRIPTION	QTY. PER ASSY A
	075-01100	Torque Plate Assy.	1
1	065-00600	Plate-Torque	1
2	097-00102	Brake Adjuster Eccentric Assy LH	1
	096-00102	Eccentric-Brake Adjuster	1
3	094-90100	Nut	1
4	094-03000	Nut-Jam (AN316-4)	1
5	095-15600	Washer-Lock (MS35333-40)	1
6	097-00101	Brake Adjuster Eccentric Assy RH	1
	096-00101	Eccentric-Brake Adjuster	1
3	094-90100	Nut	1
4	094-03000	Nut-Jam (AN316-4)	1
5	095-15600	Washer-Lock (MS35333-40)	1
7	172-00102	Shoe Assy. LH	1
	066-00500	Lining (1) (2)	1
8	145-00200	Bushing	1
	105-00300	Rivet (MS16536-93)	6
9	172-00101	Shoe Assy. RH	1
	066-00500	Lining (1) (2)	1
8	145-00200	Bushing	1
	105-00300	Rivet (MS16536-93)	6
10	091-00300	Cylinder Assy.	1
11	167-00100	Tube Assy.	1
12	092-00100	Piston Assy.	2
	062-00200	Piston-Brake	2
	089-00100	Plate-Wear	2
13	101-01600	O-Ring (MS28775-211)	2
14	101-00500	O-Ring (MS28775-010)	1
15	082-00300	Spring	1
16	093-00100	Plate-Anchor Bolt	3
17	103-20300	Bolt (AN5-15A)	2
18	094-10400	Nut (MS21044-N5)	2
19	095-15700	Washer-Lock	1
20	094-03700	Nut-Jam	1
21	087-00100	Bleeder Assy.	1
22	077-00100	Body-Bleeder	1
23	079-00100	Screw-Bleeder	1
24	101-00300	O-Ring (MS28775-008)	1

Assy. Number

A) C2000 (30-2)

NOTES:

(1) When ordering lining, order 066-00504 which includes rivets.

(2) Refer to the latest revision of AWBCMM0001 Component Maintenance Manual for lining installation instructions.

4

C7000 (30-3), C7000A (30-3A)

Organic Lining

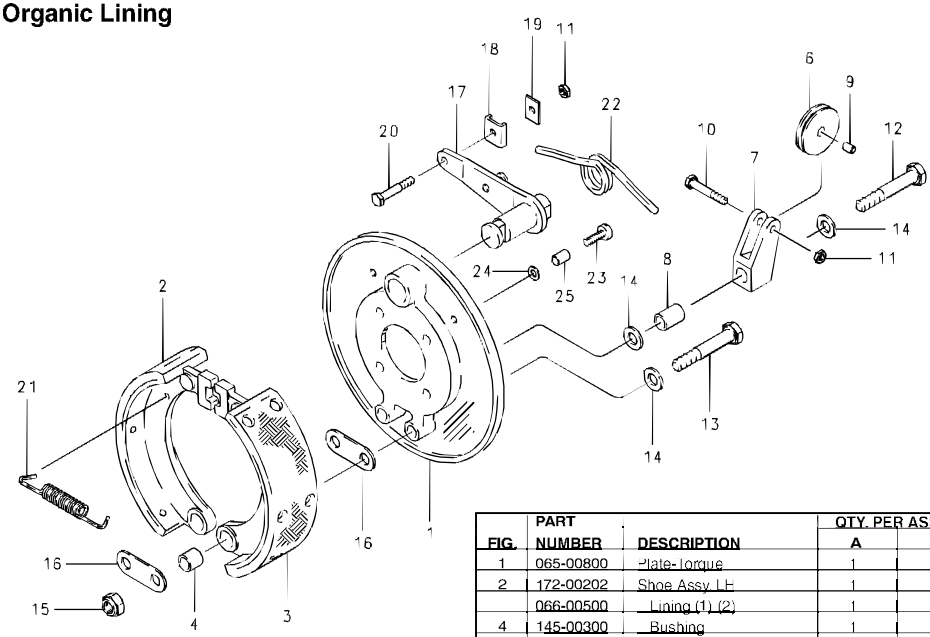

Assy. Number

A) C7000 (30-3)

B) C7000A (30-3A)

NOTES:

(1) When ordering lining, order 066-00504 which includes rivets.

(2) Refer to the latest revision of AWBCMM0001 Component Maintenance Manual for lining installation instructions.

FIG.	PART NUMBER	DESCRIPTION	QTY. PER ASSY. A	QTY. PER ASSY. B
1	065-00800	Plate-Torque	1	1
2	172-00202	Shoe Assy. LH	1	1
	066-00500	Lining (1) (2)	1	1
4	145-00300	Bushing	1	1
	105-00300	Rivet (MS16536-93)	6	6
	089-00200	Plate-Wear	1	1
3	172-00201	Shoe Assy. RH	1	1
	066-00500	Lining (1) (2)	1	1
4	145-00300	Bushing	1	1
	105-00300	Rivet (MS16536-93)	6	6
	089-00200	Plate-Wear	1	1
5	174-00100	Pulley-Bracket Assy.	1	
6	179-00100	Pulley Cable	1	
7	173-00100	Bracket Pulley	1	
8	145-00400	Bushing	1	
9	145-00500	Bushing	1	
10	103-00200	Bolt (AN3-7A)	1	
11	094-10200	Nut (NASM21083N3)	2	1
12	103-10600	Bolt (AN4-23A)	1	
13	103-10400	Bolt (AN4-15A)	1	2
14	095-10400	Washer (AN960-416)	3	2
15	094-10300	Nut (MS21044-N4)	2	2
16	093-00200	Plate-Anchor Bolt	2	2
17	181-00100	Cam Assy.	1	1
18	176-00200	Clip-Washer	1	1
19	176-00100	Clip-Washer	1	1
20	103-00100	Bolt (AN3-5A)	1	1
21	082-00300	Spring	1	1
22	082-00400	Spring	1	1
23	102-25100	Screw (AN526-1024-8)	1	1
24	095-00200	Washer	1	1
25	145-00600	Bushing	1	1

30-9, 30-9A, 30-9C, 30-9D, 30-9E, 30-181A, 30-308

Organic Lining

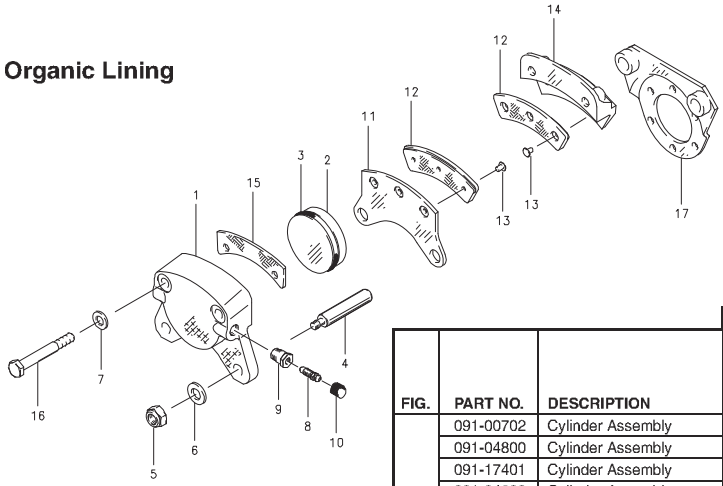

NOTES:

(1) 199-200 Kit Upgrade converts 30-181 to 30-181A. TSO approved per PRM58.

(2) Inactive – superseded by 30-9C.

			PER ASSY.						
FIG.	PART NO.	DESCRIPTION	30-9	30-9A	30-9C	30-9D	30-9E	30-181A	30-308
	091-00702	Cylinder Assembly	1			1	1		
	091-04800	Cylinder Assembly		1	1				
	091-17401	Cylinder Assembly						1	
	091-24600	Cylinder Assembly							1
1	061-00601	Cylinder	1		1	1	1	1	
	061-03901	Cylinder		1					
	061-20100	Cylinder							1
	092-00200	Piston Assembly	1	1	1	1	1	1	1
2	062-00300	Piston	1	1	1	1	1	1	1
3	101-02300	O-Ring (MS28775-218)	1	1	1	1	1	1	1
4	069-00400	Anchor Bolt	2	2	2	2	2	2	2
5	094-10300	Nut (MS21044-N4)	2	2	2	2	2	2	2
6	095-10400	Washer (AN960-416)	2	2	2	2	2	2	4
7	095-10200	Washer (AN960-416L)		2				2	
	095-10400	Washer (AN960-416)	2		2	2	2		
8	079-00300	Screw-Bleeder	1	1	1	1	1	1	1
9	081-00100	Seat-Bleeder	1	1	1	1	1	1	1
10	183-00100	Cap-Bleeder	1	1	1	1	1	1	1
	073-00300	Pressure Plate Assy	1	1	1	1	1	1	
	073-12200	Pressure Plate Assy							1
11	063-00500	Pressure Plate	1	1	1	1	1	1	1
12	066-10600	Lining	1	1	1	1	1	1	
	066-14800	Lining							1
13	105-00200	Rivet	3	3	3	3	3	3	3
	074-00200	Back Plate Assy	1	1	1	1	1	1	
	074-08300	Back Plate Assy							1
14	064-00500	Back Plate	1	1	1	1	1	1	1
12	066-10600	Lining	1	1	1	1	1	1	
	066-14800	Lining							1
13	105-00200	Rivet	3	3	3	3	3	3	3
15	068-00401	Shim						1	
16	103-12100	Bolt (AN4H15A)	2	2	2	2	2		2
	103-11500	Bolt						2	
17	075-00800	Torque Plate Assy	1	1	1			1	1
	075-19300	Torque Plate Assy				1			
	075-19900	Torque Plate Assy					1		

30-133, 30-164

Organic Lining
Metallic Lining

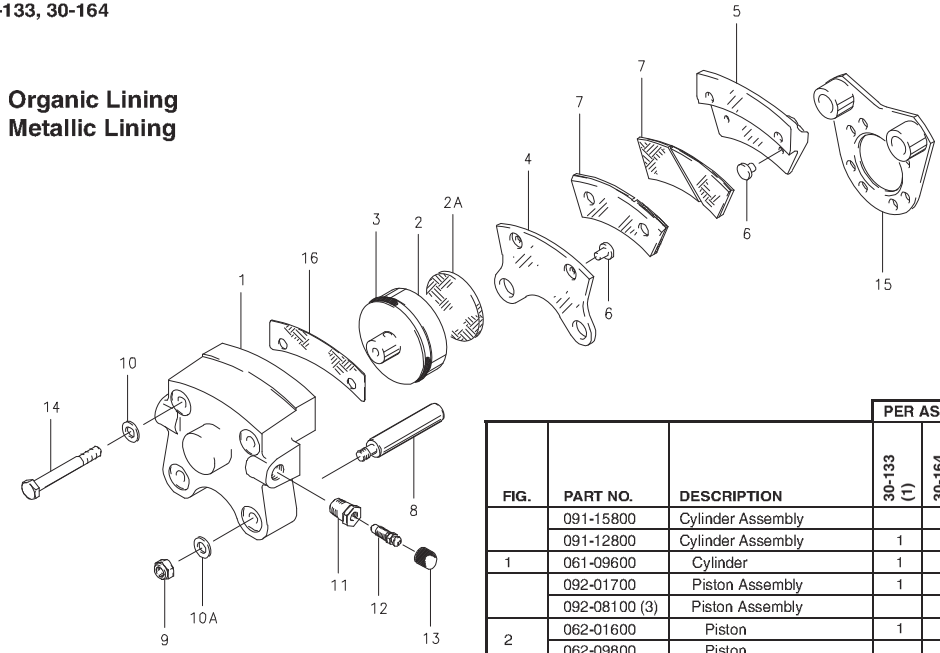

FIG.	PART NO.	DESCRIPTION	PER ASSY. 30-133 (1)	PER ASSY. 30-164 (2) (3)
	091-15800	Cylinder Assembly		1
	091-12800	Cylinder Assembly	1	
1	061-09600	Cylinder	1	1
	092-01700	Piston Assembly	1	
	092-08100 (3)	Piston Assembly		1
2	062-01600	Piston	1	
	062-09800	Piston		1
2A	088-00100	Insulator		1
3	101-02300	O-Ring (MS28775-224)	1	1
	073-07200	Pressure Plate Assy		1
	073-03600	Pressure Plate Assy	1	
4	063-01200	Pressure Plate	1	1
6	177-00300	Pin		2
	105-00200	Rivet	2	
7	066-06200	Lining		1
	066-10500	Lining	1	
	074-05600	Back Plate Assy		1
	074-02900	Back Plate Assy	1	
5	064-00500	Back Plate	1	1
6	177-00300	Pin		2
	105-00200	Rivet	2	
7	066-06200	Lining		1
	066-10500	Lining	1	
8	069-00400	Anchor Bolt	2	2
9	094-10300	Nut (MS21044-N4)	2	2
10	095-10400	Washer (AN960-416)		2
	095-10200	Washer (AN960-416L)	2	
10A	095-10200	Washer (AN960-416L)	2	2
11	081-00100	Seat-Bleeder	1	1
12	079-00300	Screw-Bleeder	1	1
13	183-00100	Cap-Bleeder	1	1
14	103-11700	Bolt	2	2
15	075-00800	Torque Plate Assy	1	1
16	068-05300 (3)	Shim, Insulator		1

NOTES:

(1) Organic lining.

(2) Metallic lining.

(3) 199-214 Insulator Kit retrofits brake to add insulator shims and pistons.

35-200A (30-1), 30-4, 30-5, 30-6, 30-7

Organic Lining

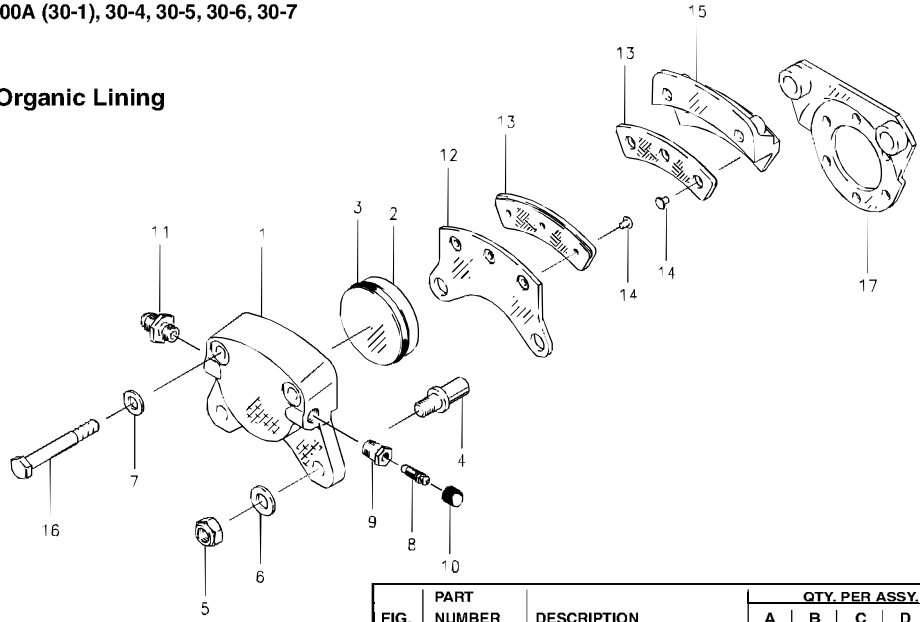

FIG.	PART NUMBER	DESCRIPTION	QTY. PER ASSY. A	B	C	D	E
	091-00200	Cylinder Assy.	1	1	1		1
	091-00600	Cylinder Assy.				1	
1	061-00200	Cylinder	1	1	1	1	1
2	062-00100	Piston	1	1	1	1	1
3	101-02900	O-Ring (MS28775-326)	1	1	1	1	1
4	069-00200	Anchor Bolt	2	2	2	2	2
5	094-10100	Nut (MS21042-6)	2	2	2	2	2
6	095-10100	Washer (AN960-616L)	2	2	2	2	2
	095-10700	Washer (AN960-516L)	2	2	2	2	2
8	079-00300	Screw-Bleeder	1	1	1	1	1
9	081-00100	Seat-Bleeder	1	1	1	1	1
10	183-00100	Cap	1	1	1	1	1
11	104-00300	Fitting (AN816-4D)	1	1		1	
	073-00100	Pressure Plate Assy.	1	1		1	1
	(4)	Pressure Plate Assy.			1		
12	063-00200	Pressure Plate	1	1	1	1	1
13	066-11100	Lining	1	1		1	1
	(4)	Lining			1		
14	105-00200	Rivet	3	3	3	3	3
	074-00100	Back Plate Assy.	1	1			1
	074-00300	Back Plate Assy.				1	
	(4)	Back Plate Assy.			1		
15	064-00300	Back Plate	1	1	1		1
	064-00700	Back Plate				1	
13	066-11100	Lining	1	1		1	1
	(4)	Lining			1		
14	105-00200	Rivet	3	3	3	3	3
16	103-20700	Bolt (AN5H14A)	2	2	2	2	2
	075-01200	Torque Plate Assy.		1			
17	075-00200	Torque Plate Assy.					1
	(4)	Torque Plate Assy.	1		1		
	075-00500	Torque Plate Assy.				1	

Assy. Number

A) 35-200A (30-1) (1) (2)

B) 30-4 (1) (3)

C) 30-5 (1) (3)

D) 30-6

E) 30-7 (1) (2)

NOTES:

(1) Inactive assembly – spares support only for parts listed.

(2) Superceded by 199-49 Kit.

(3) Superceded by 30-56A brake and 40-86 wheel.

(4) Inactive part – no longer available for spares support.

4

30-18, 30-19, 30-19A, 30-40, 30-40A, 30-45

Organic Lining

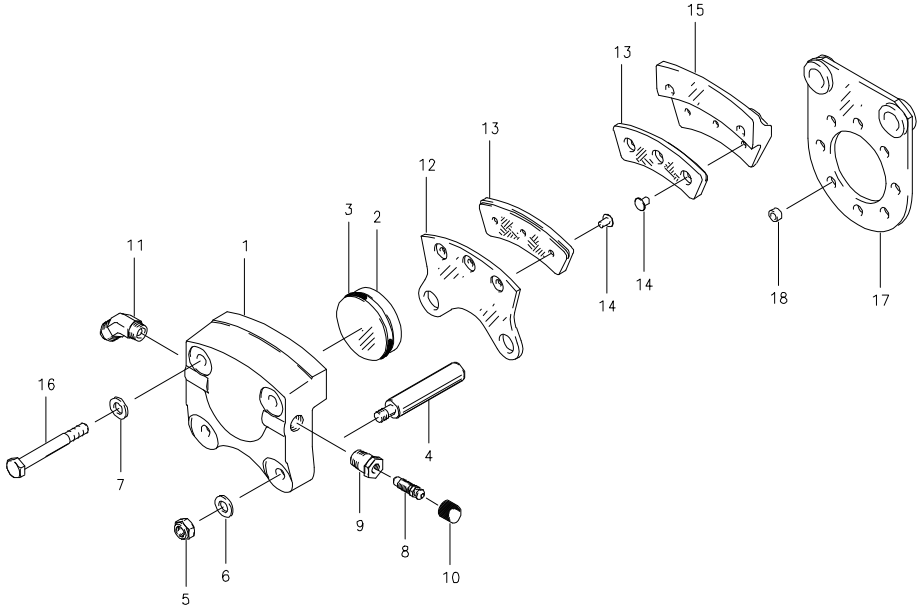

30-18, 30-19, 30-19A, 30-40, 30-40A, 30-45

Organic Lining

FIG.	PART NUMBER	DESCRIPTION	QTY. PER ASSY. A	B	C	D	E	F
	091-00701	Cylinder Assy.	1	1				
	091-00702	Cylinder Assy.			1	1		
1	061-00601	Cylinder	1	1	1	1	1	
	(3)	Cylinder						1
	092-00200	Piston Assy.	1	1	1	1		
	(3)	Piston Assy.					1	1
2	062-00300	Piston	1	1	1	1		
	(3)	Piston					1	1
3	101-02300	O-Ring (MS28775-218)	1	1	1	1	1	
	(3)	O-Ring						1
4	069-00200	Anchor Bolt						2
	069-00400	Anchor Bolt	2	2	2	2	2	
5	094-10100	Nut (AN364-624C)						2
	094-10300	Nut (MS21044-N4)	2	2	2	2	2	
6	095-10100	Washer (AN960-616L)						2
	095-10400	Washer (AN960-416)	2	2	2	2	2	
7	095-10700	Washer (AN960-516L)						2
	095-10200	Washer (AN960-416L)	2	2	2	2	2	
8	079-00300	Screw-Bleeder	1	1	1	1	1	1
9	081-00100	Seat-Bleeder	1	1	1	1	1	1
10	183-00100	Cap-Bleeder	1	1	1	1	1	1
	104-00400	Fitting (MS20822-4D)	1	1				
11	104-00500	Fitting (MS20823-4D)			1	1		
	104-00300	Fitting (AN816-4D)					1	1
	073-00100	Pressure Plate Assy.						1
	073-00300	Pressure Plate Assy.	1	1	1	1	1	
12	063-00200	Pressure Plate						1
	063-00500	Pressure Plate	1	1	1	1	1	
13	066-11100	Lining						1
	066-10600	Lining	1	1	1	1	1	
14	105-00200	Rivet	3	3	3	3	3	3
	074-00200	Back Plate Assy.	1	1	1	1	1	
15	064-00300	Back Plate						1
	064-00500	Back Plate	1	1	1	1	1	
13	066-11100	Lining						1
	066-10600	Lining	1	1	1	1	1	
14	105-00200	Rivet	3	3	3	3	3	3
	103-20700	Bolt (AN5H14A)						2
16	103-12100	Bolt (AN4H15A)	2			2		
	103-11500	Bolt		2	2		2	
	075-01600	Torque Plate Assy.	1					
	075-04900	Torque Plate Assy.			1			
17	075-02500	Torque Plate Assy.				1		
	075-00600	Torque Plate Assy.						1
	075-01700	Torque Plate Assy.		1				
	(3)	Torque Plate Assy.					1	
18	145-01000	Bushing					2	2

Assy. Number

A) 30-18

B) 30-19

C) 30-19A

D) 30-40

E) 30-40A (1)

F) 30-45 (1) (2)

NOTES:

(1) Inactive assembly – spares support only for parts listed.

(2) 199-60 supersedes 30-45.

(3) Inactive part – no longer available for spares support.

4

30-30, 30-55, 30-55B, 30-79, 30-79A, 30-79B, 30-214, 30-214B, 30-224

Organic Lining

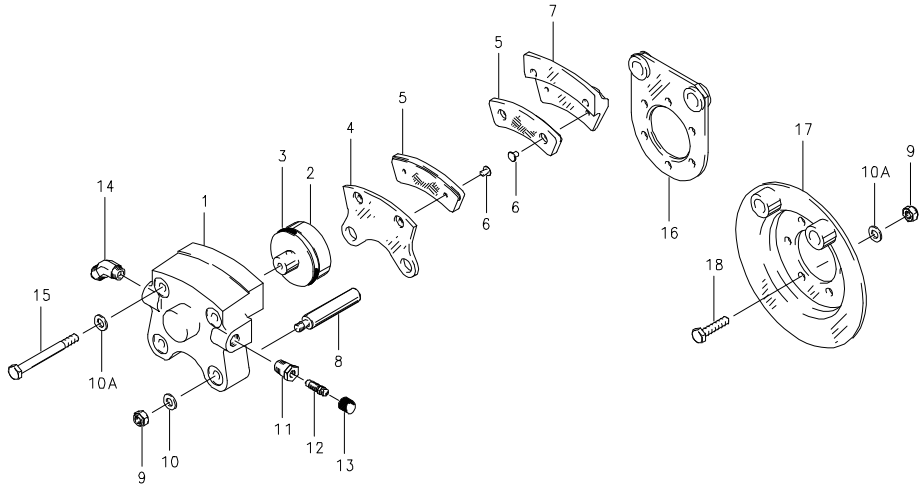

30-30, 30-55, 30-55B, 30-79, 30-79A, 30-79B, 30-214, 30-214B, 30-224

Organic Lining

FIG.	PART NUMBER	DESCRIPTION	QTY. PER ASSY. A	B	C	D	E	F	G	H	I
	091-02300	Cylinder Assy.		1	1						
	091-05500	Cylinder Assy.				1					
	091-07000	Cylinder Assy.						1			
	091-07100	Cylinder Assy.					1				
	091-12000	Cylinder Assy.	1								
	091-20400	Cylinder Assy.									1
	091-21100	Cylinder Assy.								1	
	061-01900	Cylinder	1						1	1	
1	061-02100	Cylinder		1	1						1
	061-14200	Cylinder				1	1	1			
	092-01700	Piston Assy.	1						1	1	
	092-01600	Piston Assy.		1	1	1	1	1			1
2	062-01500	Piston		1	1	1	1	1			1
	062-01600	Piston	1						1	1	
3	101-02700	O-Ring (MS28775-222)		1	1	1	1	1			1
	101-05200	O-Ring (MS28775-224)	1						1	1	
	073-01100	Pressure Plate Assy.		1	1	1	1	1	1	1	1
	073-03600	Pressure Plate Assy.	1								
4	063-01200	Pressure Plate	1	1	1	1	1	1	1	1	1
5	066-10500	Lining	1	1	1	1	1	1	1	1	1
6	105-00200	Rivet	2	2	2	2	2	2	2	2	2
	074-01000	Back Plate Assy.		1	1	1	1	1	1	1	1
	074-02900	Back Plate Assy.	1								
7	064-01500	Back Plate	1	1	1	1	1	1	1	1	1
5	066-10500	Lining	1	1	1	1	1	1	1	1	1
6	105-00200	Rivet	2	2	2	2	2	2	2	2	2
8	069-00400	Anchor Bolt	2	2	2	2	2	2			
	069-01900	Anchor Bolt							2	2	2
9	094-10300	Nut (MS21044-N4) (2)	8	2	2	2	2	2	2	2	2
10	095-10200	Washer (AN960-416L)	4	4	4	4	4	4	4	4	4
10A	095-10400	Washer (AN960-416) (2)	6								
11	081-00100	Seat-Bleeder	1	1	1	1	1		1	1	1
12	079-00300	Screw-Bleeder	1	1	1	1	1		1	1	1
13	183-00100	Cap-Bleeder	1	1	1	1	1		1	1	1
	081-00300	Seat-Bleeder (1)						1			
	101-00100	O-Ring (MS28775-006) (1)						1			
	079-00500	Screw-Bleeder (1)						1			
	104-00300	Fitting (AN816-4D)						1			
14	104-00400	Fitting (MS20822-4D)					1				
	104-00500	Fitting (MS20823-4D)	1		1	1					
15	103-11600	Bolt	2	2	2	2	2	2	2	2	2
	075-01600	Torque Plate Assy.		1							
	075-05600	Torque Plate Assy.			1						
	075-07700	Torque Plate Assy.							1		
16	075-07800	Torque Plate Assy.					1				
	075-07900	Torque Plate Assy.				1					
	075-09100	Torque Plate Assy.						1			
	075-14200	Torque Plate Assy.									1
	075-19500	Torque Plate Assy.								1	
17	075-12100	Torque Plate Assy.	1								
18	103-61100	Screw-Sock. Hd. (2)	6								

Assy. Number

A) 30-30
B) 30-55
C) 30-55B
D) 30-79
E) 30-79A
F) 30-79B
G) 30-214
H) 30-214B
I) 30-224 (3)

NOTES:

(1) Bleeder Assy. special for 30-79B, not shown.

(2) Hardware also used on 075-12100 Torque Plate Assy.

(3) This brake is not FAA-TSO Approved – Order from Airframe Manufacturer only.

4

30-53, 30-53A, 30-59, 30-59A, 30-59D, 30-59E

Organic Lining

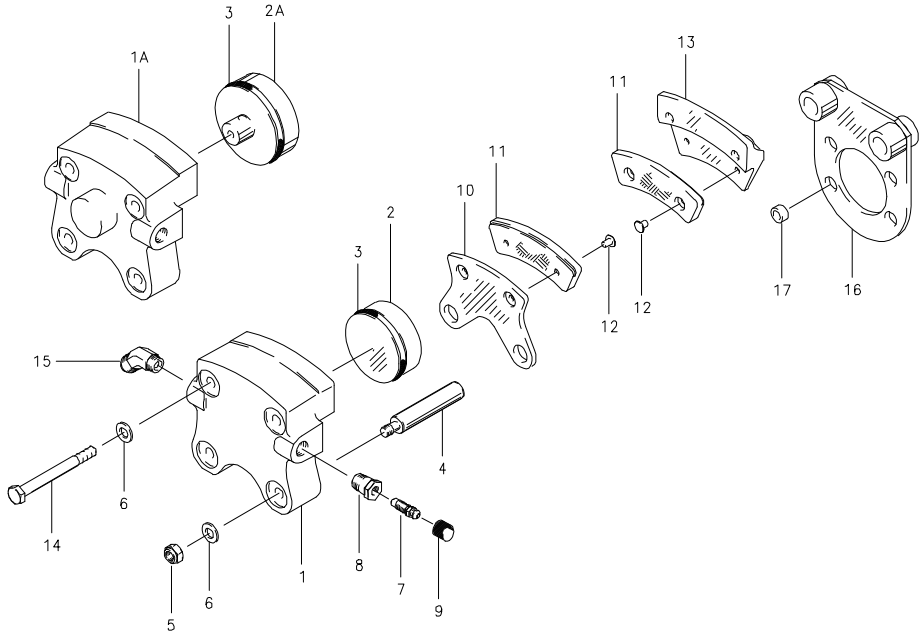

30-53, 30-53A, 30-59, 30-59A, 30-59D, 30-59E

Organic Lining

FIG.	PART NUMBER	DESCRIPTION	QTY. PER ASSY. A	B	C	D	E	F
	091-09600	Cylinder Assy.			1	1		1
	091-09800	Cylinder Assy.	1	1				
	091-11100	Cylinder Assy.					1	
1	061-07300	Cylinder	1	1				
	061-07500	Cylinder			1	1		1
1A	061-08900	Cylinder					1	
	092-01700	Piston Assy.					1	
	092-03200	Piston Assy.	1	1				
	092-04000	Piston Assy.			1	1		
2	062-03000	Piston	1	1				
	062-03900	Piston			1	1		1
2A	062-01600	Piston					1	
3	101-02700	O-Ring (MS28775-222)	1	1				
	101-05200	O-Ring (MS28775-224)			1	1	1	1
4	069-00400	Anchor Bolt	2	2	2	2	2	2
5	094-10300	Nut (MS21044-N4)	2	2	2	2	2	2
6	095-10200	Washer (AN960-416L)	4	4	4	4	4	4
7	079-00300	Screw-Bleeder	1	1	1	1	1	1
8	081-00100	Seat-Bleeder	1	1	1	1	1	1
9	183-00100	Cap-Bleeder	1	1	1	1	1	1
	073-04600	Pressure Plate Assy.	1	1	1	1	1	1
10	063-03400	Pressure Plate	1	1	1	1	1	1
11	066-11200	Lining	1	1	1	1	1	1
12	105-00200	Rivet	2	2	2	2	2	2
	074-03600	Back Plate Assy.	1	1	1	1	1	1
13	064-02900	Back Plate	1	1	1	1	1	1
11	066-11200	Lining	1	1	1	1	1	1
12	105-00200	Rivet	2	2	2	2	2	2
	103-11600	Bolt	2				2	
14	103-11700	Bolt (ABP4-20AM)			2	2		2
	103-12300	Bolt (AN4H17A)		2				
15	104-00500	Fitting (MS20823-4D)					1	
	075-07800	Torque Plate Assy.			1		1	
16	075-03700	Torque Plate Assy.				1		1
	075-14200	Torque Plate Assy.		1				
	(2)	Torque Plate Assy.	1					
17	145-01000	Bushing				2		

Assy. Number

A) **30-53 (1)**

B) **30-53A LH & RH**

C) **30-59**

D) **30-59A**

E) **30-59D**

F) **30-59E**

NOTES:

(1) Inactive assembly – spares support only for parts listed.

(2) Inactive part – no longer available for spares support.

4

30-56, 30-56A, 30-56B, 30-56C, 30-56D, 30-56F, 30-63, 30-63A, 30-63B, 30-63D, 30-63E, 30-63F, 30-63J, 30-63K, 30-63M, 30-63P, 30-63Q, 30-63S

Organic Lining

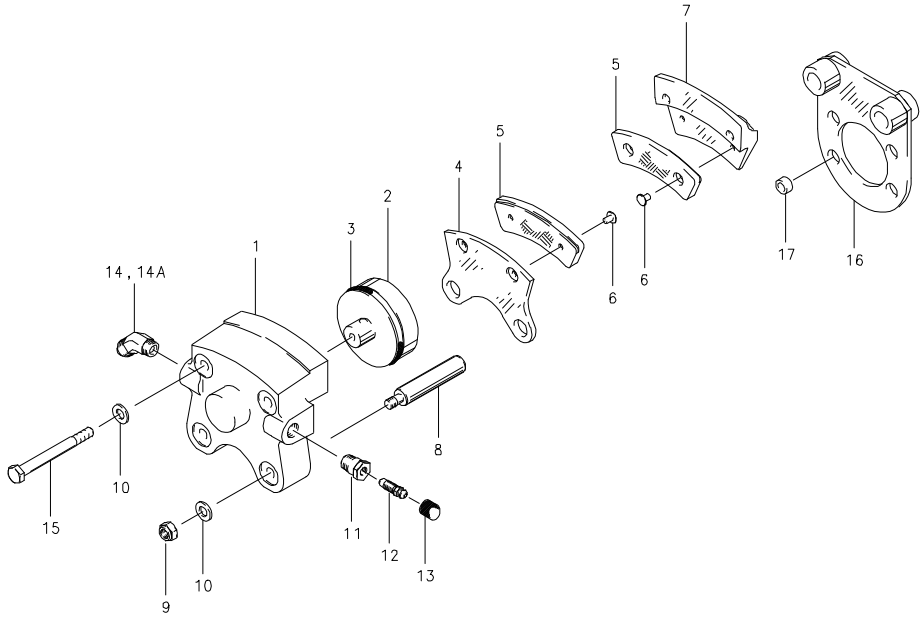

30-56, 30-56A, 30-56B, 30-56C, 30-56D, 30-56F, 30-63, 30-63A, 30-63B, 30-63D, 30-63E, 30-63F, 30-63J, 30-63K, 30-63M, 30-63P, 30-63Q, 30-63S

Organic Lining

FIG.	PART NUMBER	DESCRIPTION	QTY. PER ASSY. A	B	C	D	E	F	G	H	I	J	K	L	M	N	O	P	Q	R
	091-02200	Cylinder Assy.				1			1	1	1	1	1	1		1			1	
	091-02201	Cylinder Assy.																		1
	091-15900	Cylinder Assy.		1			1													
	091-05000	Cylinder Assy.		1											1					
	091-08400	Cylinder Assy.															1			
	091-11900	Cylinder Assy.	1		1			1										1		
	091-12200	Cylinder Assy.																	1	
1	061-01900	Cylinder	1	1	1	1	1	1	1	1	1	1	1	1	1	1	1	1	1	1
	092-01700	Piston Assy.	1	1	1	1	1	1	1	1	1	1	1	1	1	1	1	1	1	1
2	062-01600	Piston	1	1	1	1	1	1	1	1	1	1	1	1	1	1	1	1	1	1
3	101-05200	O-Ring (MS28775-224)	1	1	1	1	1	1	1	1	1	1	1	1	1	1	1	1	1	1
	073-01100	Pressure Plate Assy.	1		1	1		1	1	1	1	1	1	1	1	1		1		1
	073-03600	Pressure Plate Assy.		1			1										1		1	
4	063-01200	Pressure Plate	1	1	1	1	1	1	1	1	1	1	1	1	1	1	1	1	1	1
5	066-10500	Lining	1	1	1	1	1	1	1	1	1	1	1	1	1	1	1	1	1	1
6	105-00200	Rivet	2	2	2	2	2	2	2	2	2	2	2	2	2	2	2	2	2	2
	074-01000	Back Plate Assy.	1		1	1		1	1	1	1	1	1	1	1	1		1		1
	074-02900	Back Plate Assy.		1			1										1		1	
7	064-01500	Back Plate	1	1	1	1	1	1	1	1	1	1	1	1	1	1	1	1	1	1
5	066-10500	Lining	1	1	1	1	1	1	1	1	1	1	1	1	1	1	1	1	1	1
6	105-00200	Rivet	2	2	2	2	2	2	2	2	2	2	2	2	2	2	2	2	2	2
8	069-00400	Anchor Bolt	2	2	2	2	2	2	2	2	2	2	2	2	2	2	2	2	2	
	069-01900	Anchor Bolt																		2
9	094-10300	Nut (MS21044-N4)	2	2	2	2	2	2	2	2	2	2	2	2	2	2	2	2	2	2
10	095-10200	Washer (AN960-416L)	4	4	4	4	4	4	4	4	4	4	4	4	4	4	4	4	4	4
11	081-00100	Seat-Bleeder	1	1	1	1	1	1	1	1	1	1	1	1	1	1	1	1	1	1
12	079-00300	Screw-Bleeder	1	1	1	1	1	1	1	1	1	1	1	1	1	1	1	1	1	1
13	183-00100	Cap-Bleeder	1	1	1	1	1	1	1	1	1	1	1	1	1	1	1	1	1	1
14	104-00300	Fitting (AN816-4D)													1				1	
14A	104-00500	Fitting (MS20823-4D)	1	1	1		1	1												
15	103-11600	Bolt	2		2	2		2	2	2	2	2	2	2	2	2	2	2	2	2
	103-12300	Bolt (AN4H17A)		2			2													
	075-01600	Torque Plate Assy.		1			1													
	075-03700	Torque Plate Assy.	1						1	1	1	1	1	1						
	075-05600	Torque Plate Assy.			1															
	075-06701	Torque Plate Assy.																		1
	075-07400	Torque Plate Assy.													1					
16	075-07700	Torque Plate Assy.																	1	
	075-09400	Torque Plate Assy.															1			
	075-14000	Torque Plate Assy.																1		
	075-05500	Torque Plate Assy.				1														
	075-03701	Torque Plate Assy.														1				
	075-09100	Torque Plate Assy.						1												
17	145-01000	Bushing	2						2	2	2	2	2	2						
	145-04500	Bushing													4					

Assy. Number

- A) 30-56 (1)
- B) 30-56A
- C) 30-56B
- D) 30-56C
- E) 30-56D
- F) 30-56F
- G) 30-63 (1)
- H) 30-63A
- I) 30-63B (1)
- J) 30-63D (1)
- K) 30-63E
- L) 30-63F (1)
- M) 30-63J
- N) 30-63K
- 0) 30-63M
- P) 30-63P
- Q) 30-63Q
- R) 30-63S

NOTES:

(1) Inactive Assembly - spares support only for parts listed.

4

30-75, 30-75A, 30-75B, 30-75X

Organic Lining

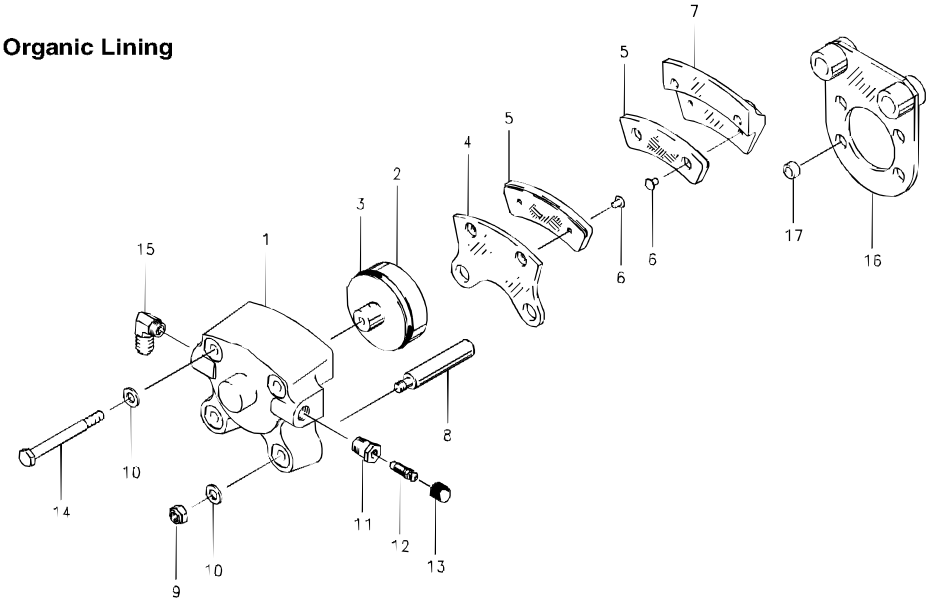

Assy. Number

A) 30-75

B) 30-75A LH & RH

C) 30-75B

D) 30-75X

NOTES:

(1) Position of bushing varies with installation.

FIG.	PART NUMBER	DESCRIPTION	QTY. PER ASSY. A	B	C	D
	091-04400	Cylinder Assy.	1	1		1
	091-06400	Cylinder Assy.			1	
1	061-14100	Cylinder	1	1	1	1
	092-07500	Piston Assy.	1	1	1	1
2	062-08000	Piston	1	1	1	1
3	101-05200	O-Ring (MS28775-224)	1	1	1	1
	073-01100	Pressure Plate Assy.	1	1	1	1
4	063-01200	Pressure Plate	1	1	1	1
5	066-10500	Lining	1	1	1	1
6	105-00200	Rivet	2	2	2	2
	074-01000	Back Plate Assy.	1	1	1	1
7	064-01500	Back Plate	1	1	1	1
5	066-10500	Lining	1	1	1	1
6	105-00200	Rivet	2	2	2	2
8	069-02500	Anchor Bolt	2	2	2	2
9	094-10300	Nut (MS21044-N4)	2	2	2	2
10	095-10200	Washer (AN960-416L)	4	4	4	4
11	081-00100	Seat-Bleeder	1	1	1	1
12	079-00300	Screw-Bleeder	1	1	1	1
13	183-00100	Cap-Bleeder	1	1	1	1
14	103-11600	Bolt	2	2	2	2
15	104-00400	Fitting (MS20822-4D)			1	
	075-03700	Torque Plate Assy.	1			1
16	075-06700	Torque Plate Assy.		1		
	075-07800	Torque Plate Assy.			1	
17	145-01000	Bushing (1)	2			2

30-236

Organic Lining

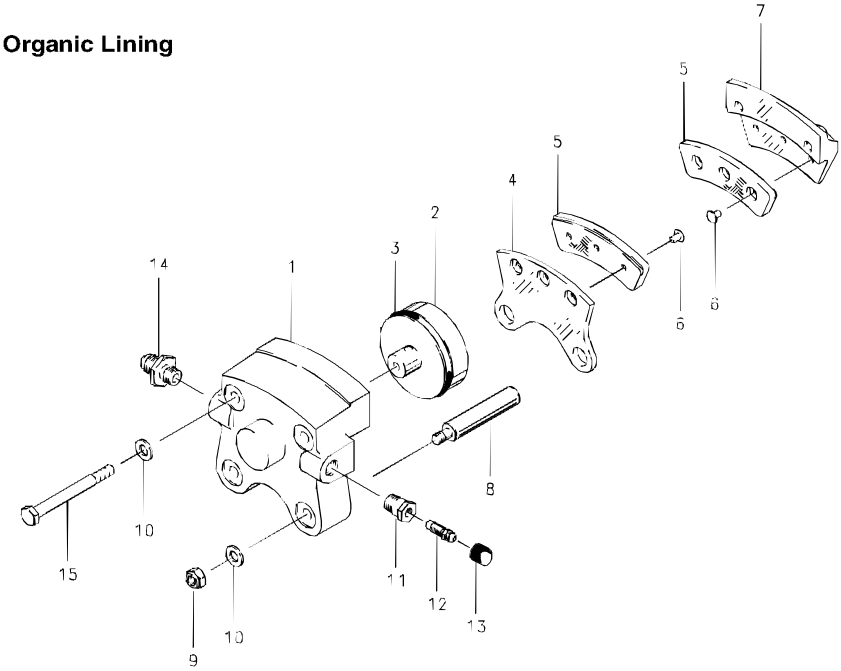

Assy. Number

A) 30-236

FIG.	PART NUMBER	DESCRIPTION	QTY. PER ASSY A
1	061-16200	Cylinder	1
2	062-08001	Piston	1
3	101-05200	O-Ring (MS28775-224)	1
4	063-01200	Pressure Plate	1
5	066-10500	Lining	1
6	105-00200	Rivet	2
7	064-01500	Back Plate	1
8	069-01900	Anchor Bolt	2
9	094-10300	Nut (MS21044-N4)	2
10	095-10200	Washer (AN960-416L)	4
11	081-00100	Seal-Bleeder	1
12	079-00300	Screw-Bleeder	1
13	183-00100	Cap-Bleeder	1
14	104-00300	Fitting (AN816-4D)	1
15	103-11600	Bolt	2

30-239, 30-239A, 30-239B

Organic Lining

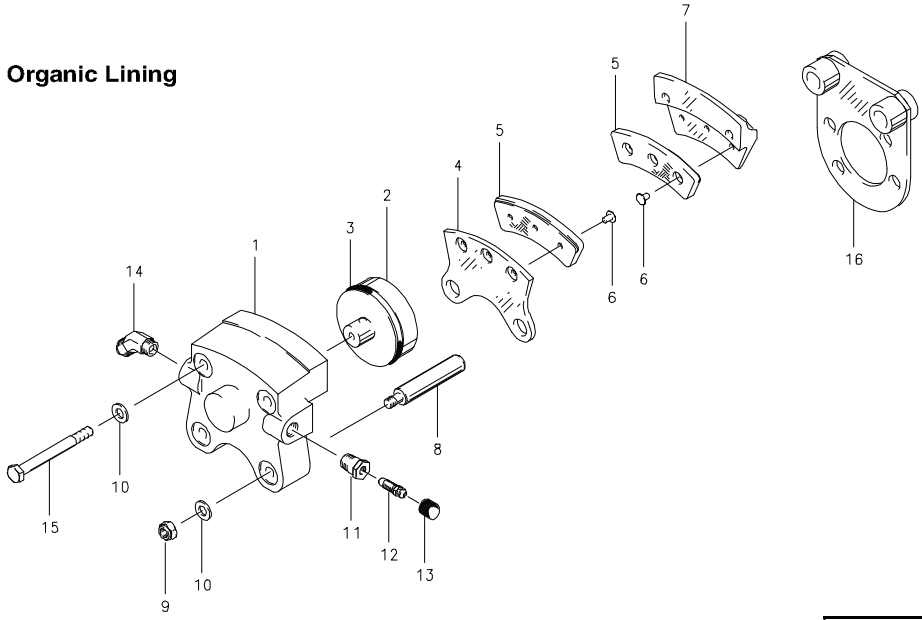

NOTES:

(1) Uses 075-20100 Torque Plate Assy. for left hand brake and 075-20150 for right hand brake.

			PER ASSY.		
FIG.	PART NO.	DESCRIPTION	30-239 (1)	30-239A	30-239B
	091-21500	Cylinder Assembly	1	1	
	091-21501	Cylinder Assembly			1
1	061-16200	Cylinder	1	1	1
2	062-08001	Piston	1	1	1
3	101-05200	O-Ring (MS28775-224)	1	1	1
	073-11200	Pressure Plate Assembly	1	1	1
4	063-00500	Pressure Plate	1	1	1
5	066-14100	Lining	1	1	1
6	105-00200	Rivet	3	3	3
	074-07700	Back Plate Assembly	1	1	1
7	064-00500	Back Plate	1	1	1
5	066-14100	Lining	1	1	1
6	105-00200	Rivet	3	3	3
8	069-01900	Anchor Bolt	2	2	2
9	094-10300	Nut (MS21044-N4)	2	2	2
10	095-10200	Washer (AN960-416L)	4	4	4
11	081-00100	Seat-Bleeder	1	1	1
12	079-00300	Screw-Bleeder	1	1	1
13	183-00100	Cap-Bleeder	1	1	1
14	104-00500	Fitting (MS20823-4D)	1	1	
	104-00900	Fitting (MS20822-3D)			1
15	103-12300	Bolt	2	2	2
16	(1)	Torque Plate Assembly	1		
	075-07700	Torque Plate Assembly		1	1

C-30018, C-30018-1, C-30018-2, C-30018-3, C-30018-4, C-30018-5, C30018-6, C30018-7

Organic Lining

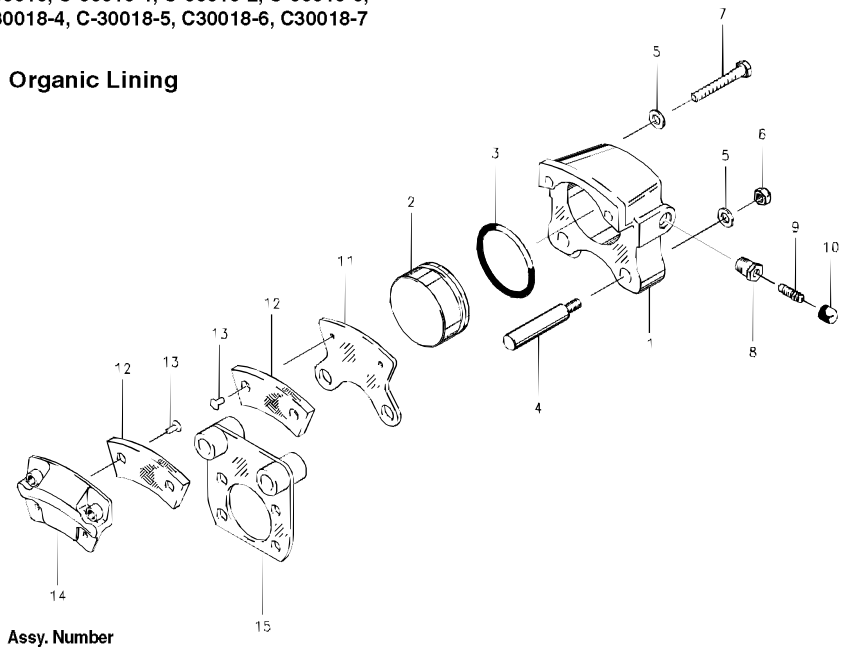

Assy. Number

A) C-30018 (3) (4)

B) C-30018-1(3)

C) C-30018-2 (3) (4)

D) C-30018-3 (3)

E) C-30018-4 (3) (4)

F) C-30018-5 (3) (4)

G) C-30018-6 (3) (4)

H) C-30018-7 (3)

NOTES:

(1) Cylinder sub-assembly includes anchor bolts, nuts and washers to attach.

(2) All brake assemblies listed were formerly manufactured by "Mc-Cauley Industrial Corporation."

(3) Inactive assembly – spares support only for parts listed.

(4) Superseded equipment – refer to Cessna Service Bulletin SEB00-5 and Cessna Service Kit SK182-120 for replacement wheels and brakes.

(5) Inactive part – no longer available for spares support.

FIG.	PART NUMBER	DESCRIPTION	QTY. PER ASSY. A	B	C	D	E	F	G	H
	091-30018	Cylinder Assy.	1	1	1	1	1	1	1	1
	(5)	Cylinder Sub-Assy. (1)	1	1	1	1	1	1	1	1
1	(5)	Cylinder	1	1	1	1	1	1	1	1
2	(5)	Piston	1	1	1	1	1	1	1	1
3	101-05200	O-Ring (MS28775-224)	1	1	1	1	1	1	1	1
4	069-30644	Anchor Bolt	2	2	2	2	2	2	2	2
5	095-10200	Washer (AN960-416L)	4	4	4	4	4	4	4	4
6	094-15200	Nut	2	2	2	2	2	2	2	2
7	103-14300	Bolt	2	2	2	2	2	2	2	2
8	081-00100	Seat-Bleeder	1	1	1	1	1	1	1	1
9	079-00300	Screw-Bleeder	1	1	1	1	1	1	1	1
10	183-00100	Cap-Bleeder	1	1	1	1	1	1	1	1
	073-30024	Pressure Plate Assy.	1	1	1	1	1	1	1	1
11	063-30025	Pressure Plate	1	1	1	1	1	1	1	1
12	066-30026	Lining	1	1	1	1	1	1	1	1
13	105-00200	Rivet	2	2	2	2	2	2	2	2
	074-30027	Back Plate Assy.	1	1	1	1	1	1	1	1
14	064-30028	Back Plate	1	1	1	1	1	1	1	1
12	066-30026	Lining	1	1	1	1	1	1	1	1
13	105-00200	Rivet	2	2	2	2	2	2	2	2
15	075-30166	Torque Plate Assy.		1						
	075-30649	Torque Plate Assy.	1			1	1	1		
	075-30650	Torque Plate Assy.			1				1	
	075-30824	Torque Plate Assy.								1

Cleveland
Wheels & Brakes

4

C-30764-5, C-30764-6, C-30764-7

Organic Lining

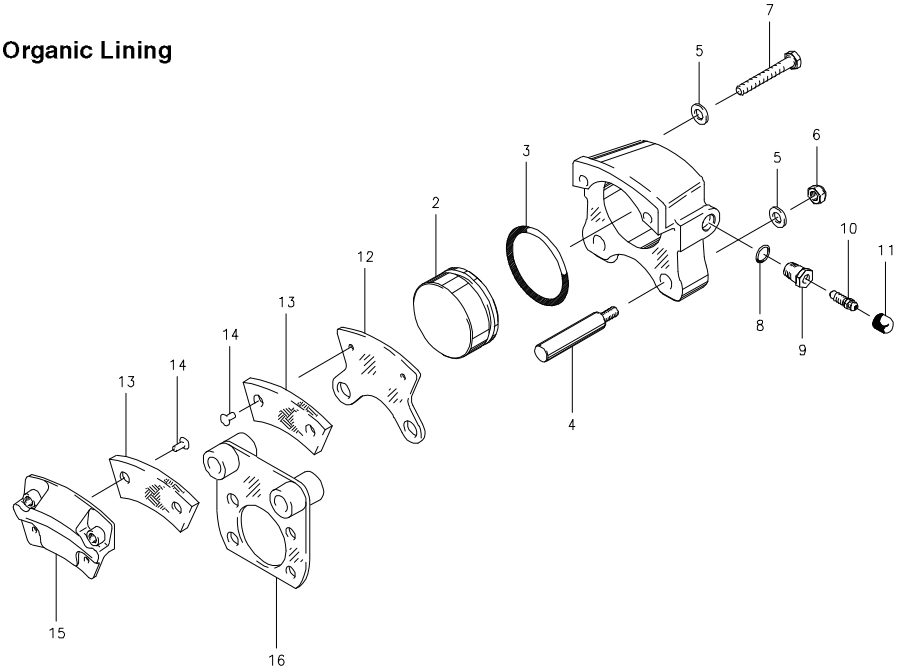

Assy. Number

A) C-30764-5 (3) (4)

B) C-30764-6 (3) (4)

C) C-30764-7 (3)

NOTES:

(1) Cylinder sub-assembly includes anchor bolts, nuts and washers to attach.

(2) All brake assemblies listed were formerly manufactured by "Mc-Cauley Industrial Corporation."

(3) Inactive assembly – spares support only for parts listed.

(4) Superseded equipment – refer to Cessna Service Bulletin SEB00-5 and Cessna Service Kit SK182-120 for replacement wheels and brakes.

(5) Inactive part – no longer available for spares support.

FIG.	PART NUMBER	DESCRIPTION	QTY. PER ASSY. A	B	C
	091-30764	Cylinder Assembly	1	1	1
	(5)	Cylinder Sub-Assembly (1)	1	1	1
1	(5)	Cylinder	1	1	1
2	(5)	Piston	1	1	1
3	101-05200	O-Ring (MS28775-224)	1	1	1
4	069-30644	Anchor Bolt	2	2	2
5	095-10200	Washer (AN960-416L)	4	4	4
6	094-15200	Nut	2	2	2
7	103-14300	Bolt (ABP4-22A)	2	2	2
8	101-00600	O-Ring (MS28775-011)	1	1	1
9	081-30169	Seat-Bleeder	1	1	1
10	079-00300	Screw-Bleeder	1	1	1
11	183-00100	Cap-Bleeder	1	1	1
	073-30024	Pressure Plate Assy.	1	1	1
12	063-30025	Pressure Plate	1	1	1
13	066-30026	Lining	1	1	1
14	105-00200	Rivet	2	2	2
	074-30027	Back Plate Assy.	1	1	1
15	064-30028	Back Plate	1	1	1
13	066-30026	Lining	1	1	1
14	105-00200	Rivet	2	2	2
16	075-30649	Torque Plate Assy.	1		
	075-30650	Torque Plate Assy.		1	
	075-30824	Torque Plate Assy			1

Cleveland
Wheels & Brakes

Parker Hannifin Corporation
Aircraft Wheel & Brake Division
Avon, Ohio

3000-250 (30-12), 3000-500 (30-13)

Organic Lining

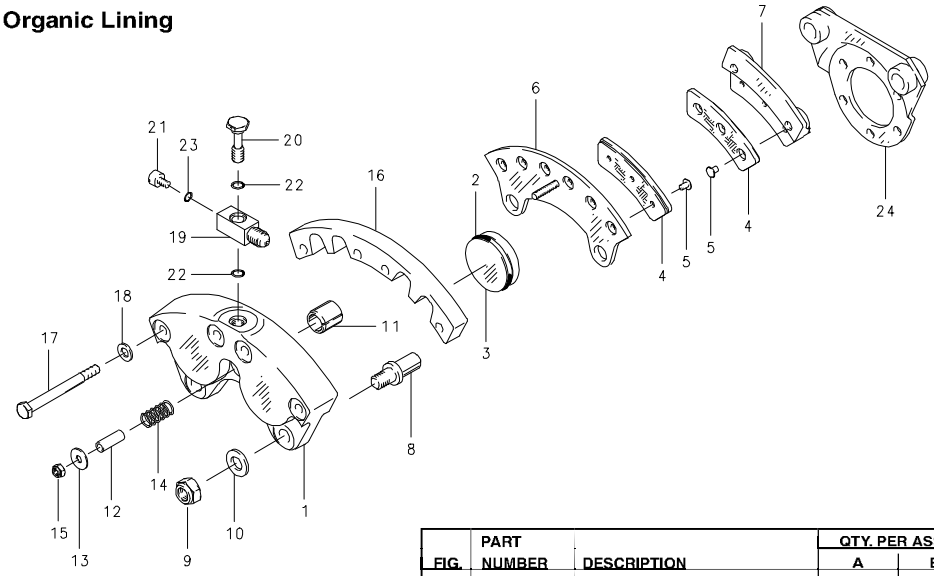

Assy. Number

A) 3000-250 (30-12)

B) 3000-500 (30-13)

FIG.	PART NUMBER	DESCRIPTION	QTY. PER ASSY. A	QTY. PER ASSY. B
	091-00400	Cylinder Assy.	1	
	091-00500	Cylinder Assy.		1
1	061-00300	Cylinder	1	
	092-00200	Piston Assy.	2	2
2	101-02300	O-Ring (MS28775-218)	2	2
3	062-00300	Piston	2	2
	073-00200	Pressure Plate Assy.	1	1
4	066-10600	Lining	2	2
5	105-00200	Rivet	6	6
6	184-00100	Plate Assy.	1	1
	074-00200	Back Plate Assy.	2	2
7	064-00500	Back Plate	2	2
4	066-10600	Lining	2	2
5	105-00200	Rivet	6	6
8	069-00200	Anchor Bolt	2	2
9	094-10100	Nut (MS21042-6)	2	2
10	095-10100	Washer (AN960-616L)	2	2
11	071-00100	Cylinder-Retract	1	1
12	067-00400	Spacer	1	1
13	095-00200	Washer	1	1
14	082-00500	Spring	1	1
15	094-10200	Nut (NASM21083N3)	1	1
16	068-00200	Shim		1
	068-00800	Shim	1	
17	103-12100	Bolt (AN4H15A)	4	
	103-12300	Bolt (AN4H17A)		4
18	095-10200	Washer (AN960-416L)	4	4
	087-00200	Bleeder Body Assy.	1	1
19	077-00200	Body-Bleeder	1	1
20	079-00200	Screw-Bleeder	1	1
21	079-00100	Screw-Bleeder	1	1
22	101-00600	O-Ring (MS28775-011)	2	2
23	101-00300	O-Ring (MS28775-008)	1	1
24	075-00300	Torque Plate Assy.		1

4

30-21, 30-24, 30-35, 30-41, 30-41A, 30-41B,
30-51, 30-51A, 30-51B, 30-60, 30-60A, 30-60B

Organic Lining

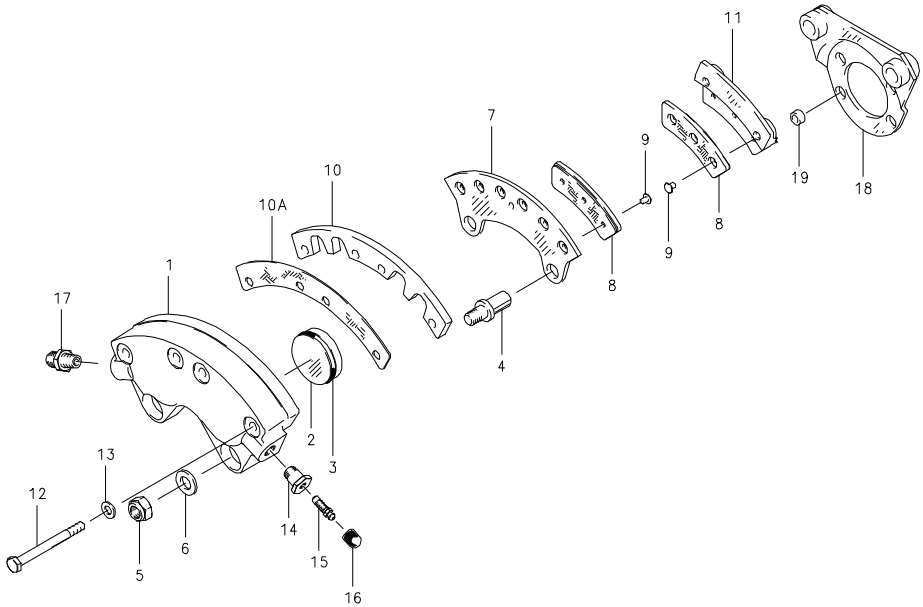

30-21, 30-24, 30-35, 30-41, 30-41A, 30-41B,
30-51, 30-51A, 30-51B, 30-60, 30-60A, 30-60B

Organic Lining

FIG.	PART NUMBER	DESCRIPTION	QTY. PER ASSY. A	B	C	D	E	F	G	H	I	J	K	L
	091-08800	Cylinder Assy.						1						
	091-08901	Cylinder Assy.											1	1
	091-12100	Cylinder Assy.								1	1			
	061-06600	Cylinder	1	1		1	1	1						
1	061-06701	Cylinder											1	1
	061-07100	Cylinder								1	1			
	(5)	Cylinder				1			1			1		
	092-00200	Piston Assy.	2	2		2	2	2	2	2	2			
	092-00700	Piston Assy.			2							2	2	2
2	062-00300	Piston	2	2		2	2	2	2	2	2			
	062-00600	Piston			2							2	2	2
3	101-02300	O-Ring (MS28775-218)	2	2		2	2	2	2	2	2			
	101-02700	O-Ring (MS28775-222)			2							2	2	2
4	069-00200	Anchor Bolt	2	2	2	2	2	2	2	2	2	2	2	2
5	094-10100	Nut (MS21042-6)	2	2	2	2	2	2	2	2	2	2	2	2
6	095-10100	Washer (AN960-616L)	2	2	2	2	2	2	2	2	2	2	2	2
	073-00400	Pressure Plate Assy.	1	1		1	1	1	1					
	073-00900	Pressure Plate Assy.			1									
	073-04100	Pressure Plate Assy.								1	1	1	1	1
7	063-00600	Pressure Plate	1	1	1	1	1	1	1	1	1	1	1	1
8	066-10600	Lining	2	2	2	2	2	2	2	2	2	2	2	2
9	105-00200	Rivet	6	6	6	6	6	6	6	6	6	6	6	6
	068-01200	Shim			1									
10	068-00800	Shim				1	1							
	(5)	Shim	1	1					1					
10A	068-01100	Shim-Insulating			1									
	074-00200	Back Plate Assy.	2	2	2	2	2	2	2					
	074-02700	Back Plate Assy.								2	2	2	2	2
11	064-00500	Back Plate	2	2	2	2	2	2	2	2	2	2	2	2
8	066-10600	Lining	2	2	2	2	2	2	2	2	2	2	2	2
9	105-00200	Rivet	6	6	6	6	6	6	6	6	6	6	6	6
	103-12200	Bolt (AN4H16A)	4	4	4				4	4	4			
12	103-12100	Bolt (AN4H15A)				4		4				4	4	4
	103-11500	Bolt					4							
13	095-10200	Washer (AN960-416L)	4	4	4	4	4	4	4	4	4	4	4	4
14	081-00100	Seat-Bleeder	1	1	1	1	1	1	1	1	1	1	1	1
15	079-00300	Screw-Bleeder	1	1	1	1	1	1	1	1	1	1	1	1
16	183-00100	Cap-Bleeder	1	1	1	1	1	1	1	1	1	1	1	1
	104-00300	Fitting (AN816-4D)	1			1	1	1	1	1	1			
17	104-00400	Fitting (AN822-4D)		1										
	104-00500	Fitting (MS20823-4D)			1									
	075-00500	Torque Plate Assy.												1
	075-01500	Torque Plate Assy.	1		1									
	075-02700	Torque Plate Assy.							1		1			
18	075-03900	Torque Plate Assy.					1							
	075-08501	Torque Plate Assy.								1				
	075-12500	Torque Plate Assy.										1	1	
	(5)	Torque Plate Assy.		1										
19	145-01000	Bushing (3)	2		2									

Assy. Number

- **A) 30-21 (1)**
- **B) 30-24 (1)**
- **C) 30-35 (1)**
- **D) 30-41 (1) (2)**
- **E) 30-41A (1)**
- **F) 30-41B**
- **G) 30-51 (1) (6)**
- **H) 30-51A**
- **I) 30-51B**
- **J) 30-60 (1) (4)**
- **K) 30-60A**
- **L) 30-60B**

NOTES:

(1) Inactive assembly – spares support only for parts listed.

(2) 30-41 superseded by 30-41B.

(3) Check position of bushing for proper replacement.

(4) 30-60 superseded by 30-60A. 30-60A superseded by 30-60B.

(5) Inactive part – no longer available for spares support.

(6) 30-51 superseded by 30-51B.

30-32, 30-32A, 30-32B, 30-32C, 30-32E

Organic Lining

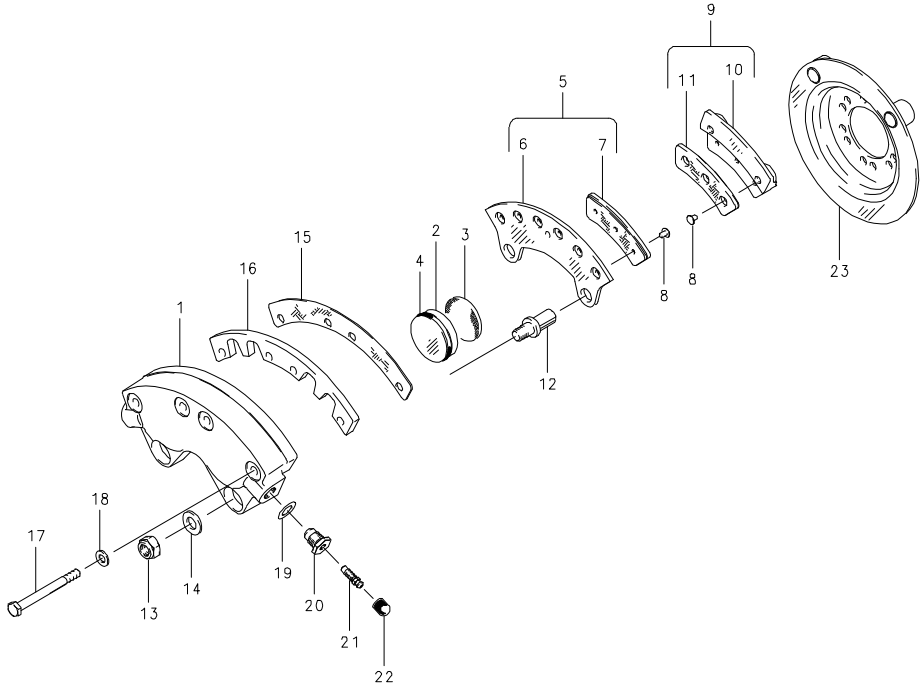

30-32, 30-32A, 30-32B, 30-32C, 30-32E

Organic Lining

FIG.	PART NUMBER	DESCRIPTION	QTY. PER ASSY. A	B	C	D	E
	091-10200	Cylinder Assy.			1	1	
	091-19800	Cylinder Assy.					1
1	061-08300	Cylinder			1	1	1
	(2)	Cylinder	1	1			
	092-00900	Piston Assy.	2	2	2	2	2
2	062-00800	Piston	2	2	2	2	2
3	088-00200	Insulator	2	2	2	2	2
4	101-02300	O-Ring (MS28775-218)	2	2	2	2	2
5	073-00400	Pressure Plate Assy.		1	1	1	1
	(2)	Pressure Plate Assy.	1				
6	063-00600	Pressure Plate	1	1	1	1	1
7	066-10600	Lining		2	2	2	2
	(2)	Lining	2				
8	105-00200	Rivet		6	6	6	6
	(2)	Pin	4				
9	074-00200	Back Plate Assy.		2	2	2	2
	(2)	Back Plate Assy.	2				
10	064-00500	Back Plate	2	2	2	2	2
11	066-10600	Lining		2	2	2	2
	(2)	Lining	2				
8	105-00200	Rivet		6	6	6	6
	(2)	Pin	4				
12	069-00200	Anchor Bolt	2	2	2	2	
	069-02600	Anchor Bolt					2
13	094-10100	Nut (MS21042-6)		2	2	2	2
14	095-10100	Washer (AN960-616L)		2	2	2	2
15	068-01100	Shim-Insulator	1	1	1	1	1
16	068-01200	Shim-Back Plate	1	1			
17	103-12000	Bolt	4	4	4	4	4
18	095-10200	Washer (AN960-416L)	4	4	4	4	4
19	101-00700	O-Ring (MS28775-012)	1	1	1	1	1
20	081-00200	Seat-Bleeder	1	1	1	1	1
21	079-00300	Screw-Bleeder	1	1	1	1	1
22	183-00100	Cap-Bleeder	1	1	1	1	1
	075-02100	Torque Plate Assy.	1	1		1	
23	075-02101	Torque Plate Assy.			1		
	075-05401	Torque Plate Assy.					1

Assy. Number

A) 30-32 (1)

B) 30-32A (1)

C) 30-32B

D) 30-32C

E) 30-32E

NOTES:

(1) Inactive assembly – spares support only for parts listed.

(2) Inactive part – no longer available for spares support.

4

30-52, 30-52A, 30-52B, 30-52D, 30-52E, 30-52F, 30-52G, 30-52H, 30-52K, 30-52L, 30-52M, 30-52N

Organic Lining

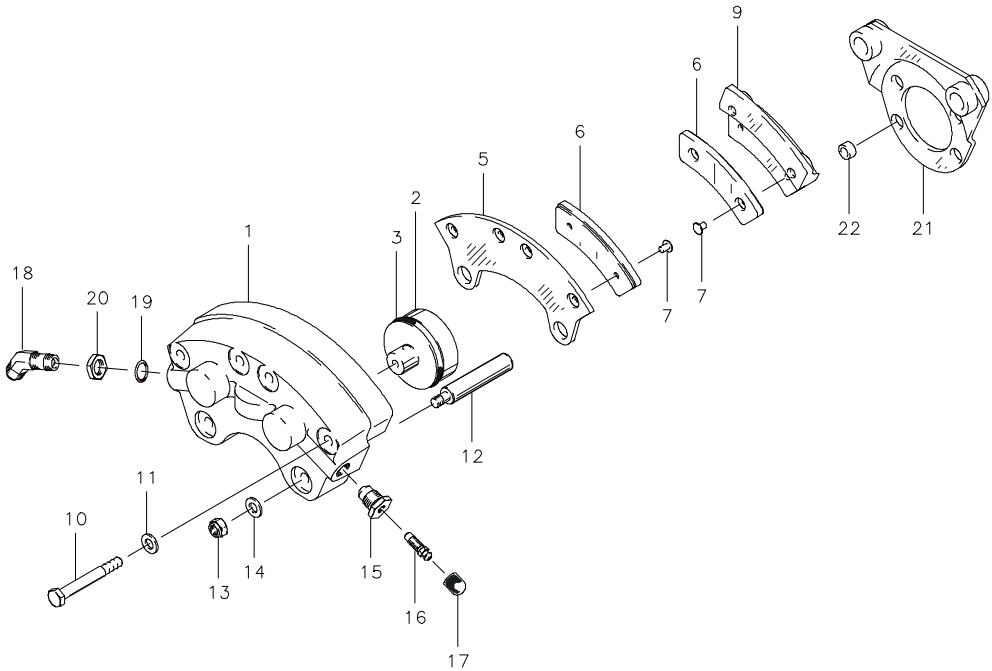

NOTES:

(1) Use with 075-11700(LH) and 075-11750(RH) Torque Plates.

(2) 30-52 supersedes 30-52G.

(3) When reordering, specify LH or RH.

(4) 30-52N supersedes 30-52D when reordering.

(5) Use with 075-07500(LH) and 075-07600(RH) Torque Plates – order from airframe manufacturer only.

(6) Inactive assembly – spares support only for parts listed.

(7) Inactive part – no longer available for spares support.

30-52, 30-52A, 30-52B, 30-52D, 30-52E, 30-52F, 30-52G, 30-52H, 30-52K, 30-52L, 30-52M, 30-52N

			PER ASSY.											
FIG.	PART NO.	DESCRIPTION	30-52	30-52A	30-52B	30-52D (4) (6)	30-52E	30-52F	30-52G (2) (6)	30-52H (1) (3)	30-52K	30-52L (5)	30-52M	30-52N
1	091-02100	Cylinder Assembly	1	1	1	1	1	1	1					1
	091-02101	Cylinder Assembly								1				
	091-02103	Cylinder Assembly												
	091-05100	Cylinder Assembly											1	
	061-01800	Cylinder	1	1	1	1	1	1	1		1		1	1
	061-01801	Cylinder								1				
	061-03600	Cylinder										1		
	092-01600	Piston Assembly	2	2	2	2	2	2	2	2	2	2	2	2
2	062-01500	Piston	2	2	2	2	2	2	2	2	2	2	2	2
3	101-02700	O-Ring (MS28775-222)	2	2	2	2	2	2	2	2	2	2	2	2
4	073-01000	Pressure Plate Assy	1	1	1	1	1	1	1	1	1	1	1	1
5	063-01100	Pressure Plate	1	1	1	1	1	1	1	1	1	1	1	1
6	066-10500	Lining	2	2	2	2	2	2	2	2	2	2	2	2
7	105-00200	Rivet	4	4	4	4	4	4	4	4	4	4	4	4
8	074-01000	Back Plate Assy	2	2	2	2	2	2	2	2	2	2	2	2
9	064-01500	Back Plate	2	2	2	2	2	2	2	2	2	2	2	2
6	066-10500	Lining	2	2	2	2	2	2	2	2	2	2	2	2
7	105-00200	Rivet	4	4	4	4	4	4	4	4	4	4	4	4
10	103-11800	Bolt	4	4	4	4	4	4	4	4	4		4	4
	103-12400	Bolt (AN4H21A)										4		
11	095-10400	Washer (AN960-416)	4	4	4	4	4	4	4	4	4	4	4	4
12	069-00400	Anchor Bolt	2	2	2	2	2	2	2	2	2	2	2	2
13	094-10300	Nut (MS21044-N4)	2	2	2	2	2	2	2	2	2	2	2	2
14	095-10200	Washer (AN960-416L)	2	2	2	2	2	2	2	2	2	2	2	2
15	081-00100	Seat-Bleeder	1	1	1	1	1	1	1	1	1		1	1
	081-00200	Seat-Bleeder										1		
16	079-00300	Screw-Bleeder	1	1	1	1	1	1	1	1	1	1	1	1
17	183-00100	Cap-Bleeder	1	1	1	1	1	1	1	1	1	1	1	1
18	104-00500	Fitting (MS20823-4D)		1									1	
	104-02000	Fitting (AN837-4D)										1		
19	101-00700	O-Ring (MS28775-012)										1		
20	094-90500	Nut (AN924-4D)										1		
21	075-01500	Torque Plate Assembly	1						1	S				
	075-01501	Torque Plate Assembly		1						E				
	075-04400	Torque Plate Assembly			1					E				
	075-05300	Torque Plate Assembly						1						
	075-05301	Torque Plate Assembly					1			N				
	075-05401	Torque Plate Assembly								O				1
	075-05402	Torque Plate Assembly								T				
	075-07300	Torque Plate Assembly								E			1	
	075-08600	Torque Plate Assembly								S				
	075-13600	Torque Plate Assembly									1			
	(7)	Torque Plate Assembly				1								
22	145-01000	Bushing	2			2			2		2		3	2

4

30-52P, 30-52Q, 30-52S, 30-52T, 30-52U, 30-52V, 30-52W, 30-52X, 30-52Y, 30-52Z, 30-52AA, 30-52AB, 30-52AC

Organic Lining

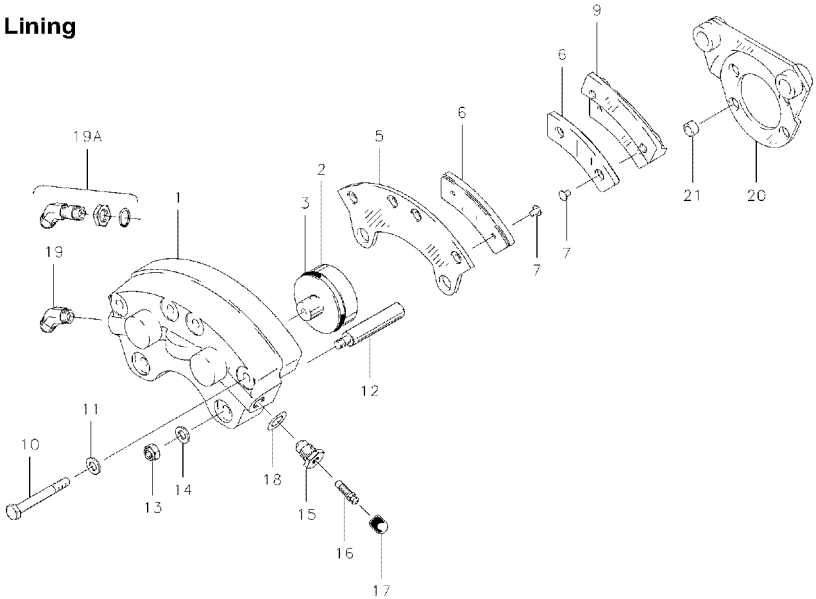

NOTES:

(1) Use with 075-09200(LH) and 075-09300(RH) Torque Plates.

(2) Use with 075-13800(LH) and 075-13850(RH) Torque Plates.

(3) When reordering, specify LH or RH.

(4) 30-52Y to be used with 40-75J corrosive resistant equipment.

(5) Inactive assembly – spares support only for parts listed.

(6) Use with 075-22800 (LH) and 075-22850 (RH) Torque Plates.

(7) Use with 075-23100 (LH) and 075-23150 (RH) Torque Plates.

(8) Use with 075-23800 (LH) and 075-23850 (RH) Torque Plates.

			PER ASSY.													
FIG.	PART NO.	DESCRIPTION	30-52P	30-52Q	30-52S (1)	30-52T	30-52U	30-52V (2) (3)	30-52W	30-52X (5)	30-52Y (4)	30-52Z (3) (6)	30-52AA (3) (7)	30-52AB	30-52AC (3) (8)
1	091-02100	Cylinder Assembly			1					1			1		
	091-02103	Cylinder Assembly									1				
	091-02104	Cylinder Assembly												1	
	091-02105	Cylinder Assembly													1
	091-05300	Cylinder Assembly	1												
	091-05800	Cylinder Assembly		1		1									
	091-10600	Cylinder Assembly						1							
	091-10601	Cylinder Assembly					1		1						
	091-10602	Cylinder Assembly										1			
	061-01800	Cylinder			1					1			1	1	1
	061-01802	Cylinder		1		1									
	061-01804	Cylinder									1				
	061-04200	Cylinder	1												
	061-08500	Cylinder						1							
	061-08501	Cylinder					1		1			1			

(Continued on next page)

30-52P, 30-52Q, 30-52S, 30-52T, 30-52U, 30-52V, 30-52W, 30-52X, 30-52Y, 30-52Z, 30-52AA, 30-52AB, 30-52AC

(Continued from previous page)

			PER ASSY.												
FIG.	PART NO.	DESCRIPTION	30-52P	30-52Q	30-52S (1)	30-52T	30-52U	30-52V (2) (3)	30-52W	30-52X (5)	30-52Y (4)	30-52Z (3) (6)	30-52AA (3) (7)	30-52AB	30-52AC (3) (8)
	092-01600	Piston Assembly	2	2	2	2	2	2	2	2			2		2
	092-07200	Piston Assembly									2				
	092-08500	Piston Assembly												2	
2	062-01500	Piston	2	2	2	2	2	2	2	2		2	2	2	2
	062-07300	Piston									2				
3	101-02700	O-Ring (MS28775-222)	2	2	2	2	2	2	2	2	2	2	2		2
	101-34500	O-Ring (M83461/1-222)												2	
4	073-01000	Pressure Plate Assy	1	1	1	1	1		1	1		1	1	1	1
	073-04200	Pressure Plate Assy						1			1				
5	063-01100	Pressure Plate	1	1	1	1	1	1	1	1	1	1	1	1	1
6	066-10500	Lining	2	2	2	2	2	2	2	2	2	2	2	2	2
7	105-00200	Rivet	4	4	4	4	4	4	4	4	4	4	4	4	4
8	074-01000	Back Plate Assy	2	2	2	2	2		2	2		2	2	2	2
	074-02900	Back Plate Assy						2			2				
9	064-01500	Back Plate	2	2	2	2	2	2	2	2	2	2	2	2	2
6	066-10500	Lining	2	2	2	2	2	2	2	2	2	2	2	2	2
7	105-00200	Rivet	4	4	4	4	4	4	4	4	4	4	4	4	4
10	103-11800	Bolt	4	4	4	4	4	4	4	4	4	4	4	4	4
11	095-10400	Washer (AN960-416)	4	4	4	4	4	4	4	4	4	4	4	4	4
12	069-00400	Anchor Bolt	2	2	2	2	2	2	2	2			2	2	
	069-01900	Anchor Bolt									2				
	069-03100	Anchor Bolt										2			2
13	094-10300	Nut (MS21044-N4)	2	2	2	2	2	2	2	2	2	2	2	2	2
14	095-10200	Washer (AN960-416L)	2	2	2	2	2	2	2	2	2	2	2	2	2
15	081-00100	Seat-Bleeder	1	1	1	1					1		1	1	1
	081-00500	Seat-Bleeder					1	1	1			1			
16	079-00300	Screw-Bleeder	1	1	1	1	1	1	1	1	1	1	1	1	1
17	183-00100	Cap-Bleeder	1	1	1	1	1	1	1	1	1	1	1	1	1
18	101-00600	O-Ring (MS28775-011)					1	1	1			1			
19	104-00500	Fitting (MS20823-4D)			1									1	
19A	104-11200	Fitting										1			
20	075-01500	Torque Plate Assembly			S		1	S				S	S	1	S
	075-01501	Torque Plate Assembly			E			E				F	F		F
	075-04400	Torque Plate Assembly			E			E				E	E		E
	075-05300	Torque Plate Assembly													
	075-05301	Torque Plate Assembly			N			N			1	N	N		N
	075-05401	Torque Plate Assembly			O	1		O	1	1		O	O		O
	075-05402	Torque Plate Assembly		1	T			T				T	T		T
	075-07300	Torque Plate Assembly			E			E				F	F		F
	075-08600	Torque Plate Assembly	1		S			S				S	S		S
21	145-01000	Bushing				2	2		2	2	2	2	2		

4

30-54, 30-54A, 30-54B, 30-54C, 30-58A, 30-58B, 30-61, 30-61D, 30-61E, 30-61F, 30-65, 30-65A, 30-65E

Organic Lining

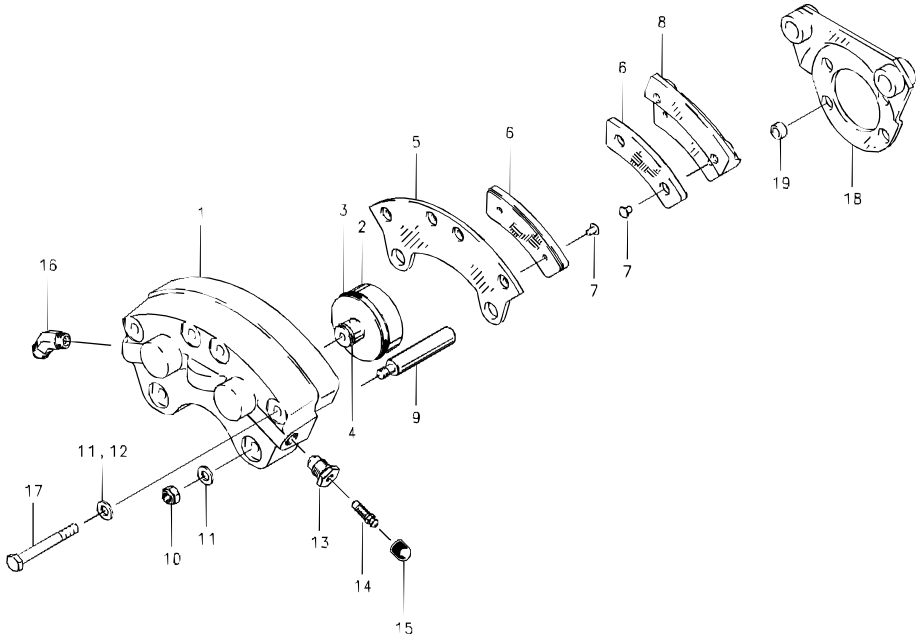

			PER ASSY.												
FIG.	PART NO.	DESCRIPTION	30-54	30-54A	30-54B	30-54C	30-58A (1)	30-58B (1)	30-61	30-61D	30-61E	30-61F (1)	30-65	30-65A	30-65E
	091-02100	Cylinder Assembly											1		
	091-02400	Cylinder Assembly												1	
	091-02401	Cylinder Assembly													1
	091-02501	Cylinder Assembly	1	1											
	091-02800	Cylinder Assembly							1						
	091-03800	Cylinder Assembly								1					
	091-04100	Cylinder Assembly									1				
	091-09200	Cylinder Assembly			1										
	091-15200	Cylinder Assembly				1									
1	061-01800	Cylinder											1		
	061-01802	Cylinder												1	
	061-02400	Cylinder	1	1	1	1	1	1	1	1	1	1			1
	092-01600	Piston Assembly	2	2	2	2	2	2	2		2	2	2	2	2
	092-02100	Piston Assembly								2					
2	062-01500	Piston	2	2	2	2	2	2	2		2	2	2	2	2
	062-01900	Piston								2					

(Continued on next page)

30-54, 30-54A, 30-54B, 30-54C, 30-58A, 30-58B, 30-61, 30-61D, 30-61E, 30-61F, 30-65, 30-65A, 30-65E

Organic Lining

(Continued from previous page)

			PER ASSY.												
FIG.	PART NO.	DESCRIPTION	30-54	30-54A	30-54B	30-54C	30-58A (1)	30-58B (1)	30-61	30-61D	30-61E	30-61F (1)	30-65	30-65A	30-65E
3	101-02700	O-Ring (MS28775-222)	2	2	2	2	2	2	2	2	2	2	2	2	2
4	082-02000	Spring-Friction								2					
	073-01000	Pressure Plate Assembly	1	1					1	1			1		1
	073-04200	Pressure Plate Assembly			1						1			1	
	073-06700	Pressure Plate Assembly				1									
	(2)	Pressure Plate Assembly					1	1				1			
5	063-01100	Pressure Plate	1	1	1	1	1	1	1	1	1	1	1	1	1
6	066-10500	Lining	2	2	2	2			2	2	2		2	2	2
	(2)	Lining					2	2				2			
7	105-00200	Rivet	4	4	4	4	4	4	4	4	4	4	4	4	4
	074-01000	Back Plate Assembly							2	2			2		
	074-01001	Back Plate Assembly	2	2											
	074-02900	Back Plate Assembly									2			2	2
	074-03500	Back Plate Assembly			2										
	074-05100	Back Plate Assembly				2									
	(2)	Back Plate Assembly					2	2				2			
8	064-01500	Back Plate	2	2	2	2	2	2	2	2	2	2	2	2	2
6	066-10500	Lining	2	2	2	2			2	2	2		2	2	2
	(2)	Lining					2	2				2			
7	105-00200	Rivet	4	4	4	4	4	4	4	4	4	4	4	4	4
9	069-00400	Anchor Bolt	2	2	2	2	2	2	2	2		2	2	2	
	069-01900	Anchor Bolt									2				2
10	094-10300	Nut (MS21044-N4)	2	2	2	2	2	2	2	2	2	2	2	2	2
11	095-10200	Washer (AN960-416L)	6	6	6	6	6	6	6	6	6	6	2	2	2
12	095-10400	Washer (AN960-416)											4	4	4
13	081-00100	Seat-Bleeder	1	1	1	1	1	1	1	1	1	1	1	1	1
14	079-00300	Screw-Bleeder	1	1	1	1	1	1	1	1	1	1	1	1	1
15	183-00100	Cap-Bleeder	1	1	1	1	1	1	1	1	1	1	1	1	1
16	104-00300	Fitting (AN8164D)					1	1						1	1
	104-00500	Fitting (MS20823-4D)	1	1		1			1		1	1			
17	103-11800	Bolt	4	4	4	4			4	4	4	4	4	4	4
	103-12400	Bolt (AN4H21A)					4	4							
18	075-00500	Torque Plate Assembly													1
	075-01500	Torque Plate Assembly							1	1	1	1			
	075-03300	Torque Plate Assembly	1												
	075-03301	Torque Plate Assembly		1		1									
	075-03900	Torque Plate Assembly											1		
	075-12600	Torque Plate Assembly			1										
	075-13000	Torque Plate Assembly												1	
	(2)	Torque Plate Assembly					1								
19	145-01000	Bushing							2	2	2	2			

NOTES:

(1) Inactive assembly – spares support only for parts listed.

(2) Inactive part – no longer available for spares support.

D-30118-3, D-30118-4, D-30118-5, D-30118-6, D-30118-7, D-30118-8, D-30118-9, D-30118-10, D-30793-3, D-30793-4, D-30793-5, D-30793-6

Organic Lining

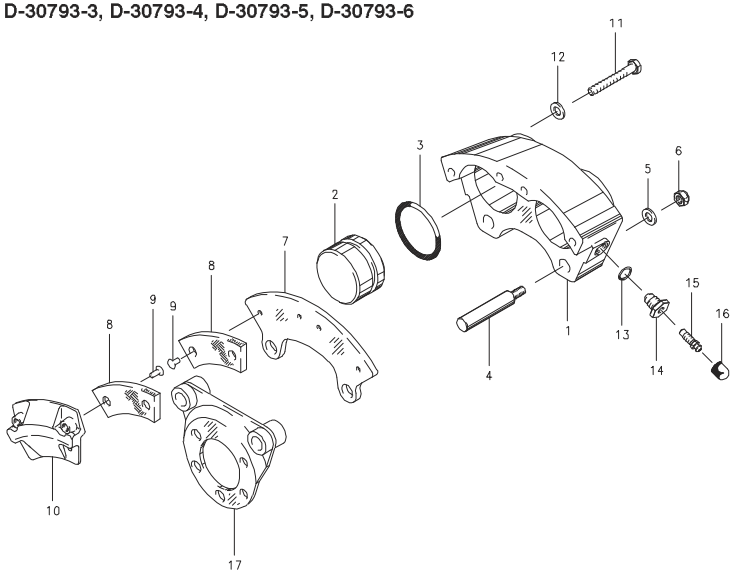

Assy. Number

- **A) D-30118-3 (3) (4)**
- **B) D-30118-4 (3) (4)**
- **C) D-30118-5 (3) (5)**
- **D) D-30118-6 (3) (5)**
- **E) D-30118-7 (3)**
- **F) D-30118-8 (3)**
- **G) D-30118-9**
- **H) D-30118-10**
- **I) D-30793-3 (3) (6)**
- **J) D-30793-4 (3) (6)**
- **K) D-30793-5 (3)**
- **L) D-30793-6 (3)**

NOTES:

(1) Cylinder sub-assembly includes anchor bolts, nuts and washers to attach.

(2) All brake assemblies listed were formerly manufactured by "McCauley Industrial Corporation".

(3) Inactive assembly – spares support only for parts listed.

(4) Superseded by 30-52U per Cessna Service Bulletin SEB00-5. Also superseded by conversion kit. See Conversion Kit Directory for applicable Aircraft model.

(5) Superseded equipment – refer to Cessna Service Bulletin SEB00-5 and Cessna Service Kit SK182-120 for replacement wheels and brakes.

(6) Superseded by 30-241.

(7) Inactive part – no longer available for spares support.

FIG.	PART NUMBER	DESCRIPTION	QTY. PER ASSY. A	B	C	D	E	F	G	H	I	J	K	L
	091-30118	Cylinder Assembly	1	1	1	1	1	1	1	1				
	091-30793	Cylinder Assembly									1	1	1	1
	(7)	Cylinder Sub-Assembly (1)	1	1	1	1	1	1	1	1	1	1	1	1
1	(7)	Cylinder	1	1	1	1	1	1	1	1	1	1	1	1
2	062-30161	Piston	2	2	2	2	2	2	2	2	2	2	2	2
3	101-02700	O-Ring (MS28775-222)	2	2	2	2	2	2	2	2	2	2	2	2
4	069-30644	Anchor Bolt	2	2	2	2	2	2	2	2	2	2	2	2
5	095-10200	Washer (AN960-416L)	2	2	2	2	2	2	2	2	2	2	2	2
6	094-15200	Nut	2	2	2	2	2	2	2	2	2	2	2	2
	(7)	Pressure Plate Assy.	1	1	1	1	1	1	1	1	1	1	1	1
7	(7)	Plate-Pressure	1	1	1	1	1	1	1	1	1	1	1	1
8	066-30026	Lining	2	2	2	2	2	2	2	2	2	2	2	2
9	105-00200	Rivet	4	4	4	4	4	4	4	4	4	4	4	4
	074-30027	Back Plate Assy.	2	2	2	2	2	2	2	2	2	2	2	2
10	064-30028	Plate-Back	2	2	2	2	2	2	2	2	2	2	2	2
8	066-30026	Lining	2	2	2	2	2	2	2	2	2	2	2	2
9	105-00200	Rivet	4	4	4	4	4	4	4	4	4	4	4	4
11	103-14300	Bolt	4	4	4	4	4	4	4	4	4	4	4	4
12	095-10400	Washer (AN960-416)	4	4	4	4	4	4	4	4	4	4	4	4
13	101-00600	O-Ring (MS28775-011)	1	1	1	1	1	1	1	1	1	1	1	1
14	081-30169	Seat-Bleeder	1	1	1	1	1	1	1	1	1	1	1	1
15	079-00300	Screw-Bleeder	1	1	1	1	1	1	1	1	1	1	1	1
16	183-00100	Cap-Bleeder	1	1	1	1	1	1	1	1	1	1	1	1
	075-30107-1	Torque Plate Assy.	1								1			
	075-30107-2	Torque Plate Assy.		1								1		
17	075-30107-3	Torque Plate Assy.							1					
	075-30107-4	Torque Plate Assy.								1				
	075-30278-1	Torque Plate Assy.			1		1						1	
	075-30278-2	Torque Plate Assy				1		1						1

Cleveland
Wheels & Brakes

Parker Hannifin Corporation
Aircraft Wheel & Brake Division
Avon, Ohio

30-23, 30-23A, 30-23B, 30-23C, 30-23D

Metallic Lining

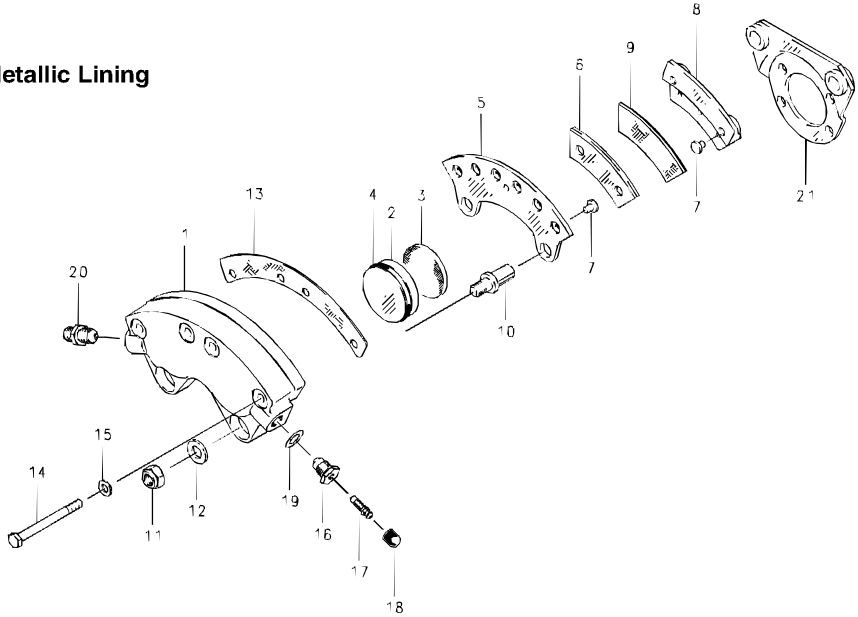

Assy. Number

A) 30-23 (3) (4)

B) 30-23A (1) (2) (4)

C) 30-23B (4)

D) 30-23C (4)

E) 30-23D (4)

NOTES:

(1) Inactive assembly – spares support only for parts listed.

(2) 30-23C supersedes 30-23A.

(3) 30-23: 061-06500 Cylinder supersedes 061-01000 Cylinder & 068-01200 Shim.

(4) Torque plate, Item 21, supplied by airframe manufacturer.

(5) Inactive part – no longer available for spares support.

FIG.	PART NUMBER	DESCRIPTION	QTY. PER ASSY. A	B	C	D	E
	091-01300	Cylinder Assy.	1				
	091-08600	Cylinder Assy.				1	
	091-19100	Cylinder Assy.					1
1	061-06500	Cylinder	1		1	1	1
	(5)	Cylinder		1			
	092-00800	Piston Assy.	2	2	2	2	2
2	062-00700	Piston	2	2	2	2	2
3	088-00100	Insulator	2	2	2	2	2
4	101-02700	O-Ring (MS28775-222)	2	2	2	2	2
	073-03800	Pressure Plate Assy.	1	1	1	1	1
5	063-00600	Pressure Plate	1	1	1	1	1
6	066-06500	Lining	2	2	2	2	2
7	177-00300	Pin	4	4	4	4	4
	074-02300	Back Plate Assy.	2	2	2	2	2
8	064-00500	Back Plate	2	2	2	2	2
9	066-06200	Lining	2	2	2	2	2
7	177-00300	Pin	4	4	4	4	4
10	069-00200	Anchor Bolt	2	2	2	2	
	069-02600	Anchor Bolt					2
11	094-10100	Nut (MS21042-6)	2	2	2	2	2
12	095-10100	Washer (AN960-616L)	2	2	2	2	2
13	068-01100	Shim-Insulator	1	1	1	1	1
14	103-12200	Bolt (AN4H16A)	4	4	4	4	4
15	095-10200	Washer (AN960-416L)	4	4	4	4	4
16	081-00200	Seat-Bleeder	1	1	1	1	1
17	079-00300	Screw-Bleeder	1	1	1	1	1
18	0183-00100	Cap-Bleeder	1	1	1	1	1
19	101-00700	O-Ring (MS28775-012)	2	2	2	2	2
20	104-00200	Fitting (AN815-4D)	1		1		
	104-02200	Fitting (AN919-2D)		1		1	1

30-61A, 30-61B, 30-83, 30-83A

Metallic Lining

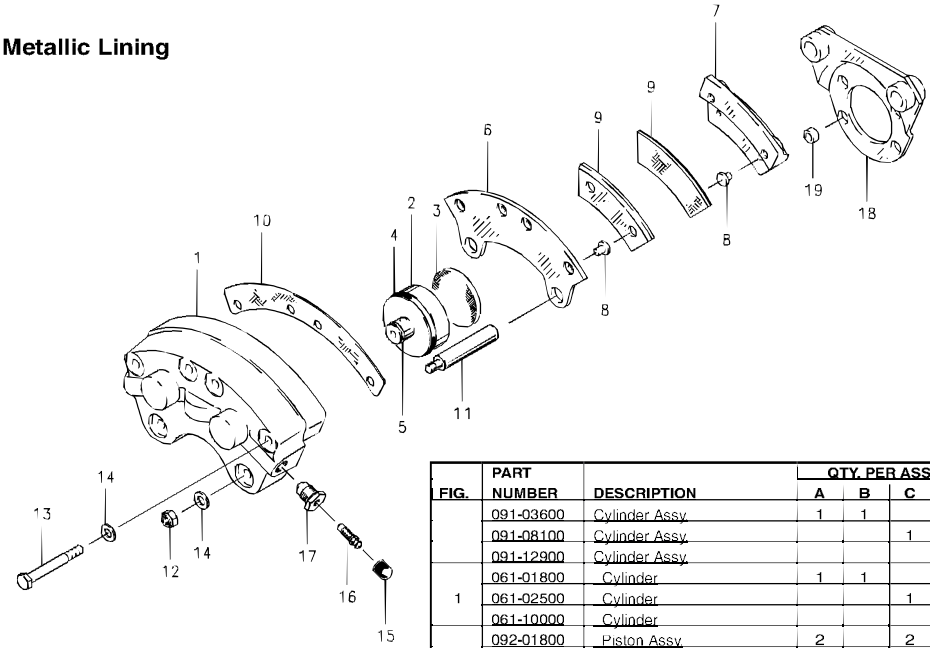

Assy. Number

A) 30-61A (1)

B) 30-61B (2)

C) 30-83

D) 30-83A

NOTES:

(1) Inactive assembly – spares support only for parts listed.

(2) This brake is not FAA-TSO approved – order from airframe manufacturer only.

FIG.	PART NUMBER	DESCRIPTION	QTY. PER ASSY. A	B	C	D
	091-03600	Cylinder Assy.	1	1		
	091-08100	Cylinder Assy.			1	
	091-12900	Cylinder Assy.				1
1	061-01800	Cylinder	1	1		
	061-02500	Cylinder			1	
	061-10000	Cylinder				1
	092-01800	Piston Assy.	2		2	2
	092-02000	Piston Assy.		2		
2	062-01700	Piston	2		2	2
	062-01800	Piston		2		
3	088-00100	Insulator	2	2	2	2
4	101-02700	O-Ring (MS28775-222)	2	2	2	2
5	082-02000	Spring-Friction		2		
	073-01600	Pressure Plate Assy.	1	1		
	073-02700	Pressure Plate Assy.			1	1
6	063-01100	Pressure Plate	1	1	1	1
	074-01400	Back Plate Assy.	2	2		
	074-03000	Back Plate Assy.			2	2
7	064-01500	Back Plate	1	1	1	1
8	177-00300	Pin-Lining	8	8	8	8
9	066-03600	Lining	4	4		
	066-06200	Lining			4	4
10	068-01100	Shim-Insulator	1	1	1	1
11	069-00400	Anchor Bolt	2	2	2	2
12	094-10300	Nut (MS21044-N4)	2	2	2	2
	103-11700	Bolt			4	4
13	103-11800	Bolt	4			
	103-12400	Bolt (AN4H21A)		4		
14	095-10200	Washer (AN960-416L)	6		6	6
	095-10400	Washer (AN960-416)		6		
15	183-00100	Cap-Bleeder	1	1	1	1
16	079-00300	Screw-Bleeder	1	1	1	1
17	081-00100	Seat-Bleeder	1	1	1	1
18	075-01500	Torque Plate Assy.	1	1		
	075-03900	Torque Plate Assy.			1	1
19	145-01000	Bushing-T.P.	2	2		

Cleveland
Wheels & Brakes

Parker
Parker Hannifin Corporation
Aircraft Wheel & Brake Division
Avon, Ohio

30-127, 30-127A, 30-127C, 30-127D

Metallic Lining

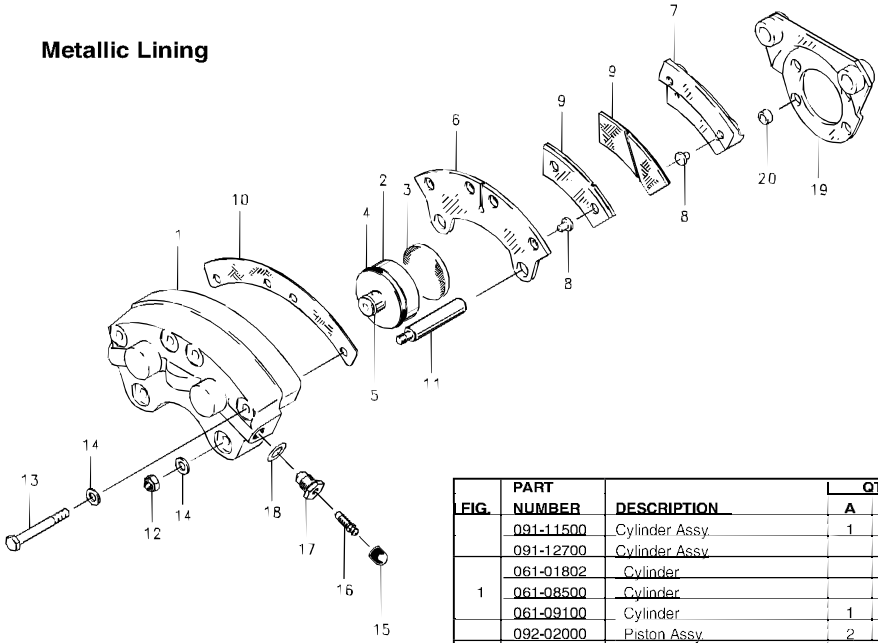

FIG.	PART NUMBER	DESCRIPTION	QTY. PER ASSY. A	B	C	D
	091-11500	Cylinder Assy.	1			
	091-12700	Cylinder Assy.		1	1	1
	061-01802	Cylinder				
1	061-08500	Cylinder		1	1	1
	061-09100	Cylinder	1			
	092-02000	Piston Assy.	2	2	2	2
2	062-01800	Piston	2	2	2	2
3	088-00100	Insulator	2	2	2	2
4	101-02700	O-Ring (MS28775-222)	2	2	2	2
5	082-02000	Spring-Friction	2	2	2	2
	073-05800	Pressure Plate Assy.	1	1	1	1
6	063-04500	Pressure Plate	1	1	1	1
	074-03000	Back Plate Assy.	2	2	2	2
7	064-01500	Back Plate	2	2	2	2
8	177-00300	Pin-Lining	8	8	8	8
9	066-06200	Lining	4	4	4	4
10	068-01100	Shim-Insulator	1	1	1	1
11	069-00400	Anchor Bolt	2	2	2	1
12	094-10300	Nut (MS21044-N4)	2	2	2	2
13	103-11800	Bolt	4	4	4	4
14	095-10400	Washer (AN960-416)	6	6	6	6
15	183-00100	Cap-Bleeder	1	1	1	1
16	079-00300	Screw-Bleeder	1	1	1	1
17	081-00100	Seat-Bleeder	1			
	081-00500	Seat-Bleeder		1	1	1
18	101-00600	O-Ring (MS28775-011)		1	1	1
	075-20200	Torque Plate Assy.				1
19	075-14300	Torque Plate Assy.		1		
	075-14500	Torque Plate Assy.	1			
20	145-01000	Bushing-T.P.	2			

Assy. Number

A) 30-127

B) 30-127A

C) 30-127C (1) (2)

D) 30-127D

NOTES:

(1) Uses 075-13800 Torque Plate Assy. for left hand brake and 075-13850 for right hand brake.

(2) When reordering, specify LH or RH.

4

30-129, 30-233, 30-233A, 30-233B

Metallic Lining

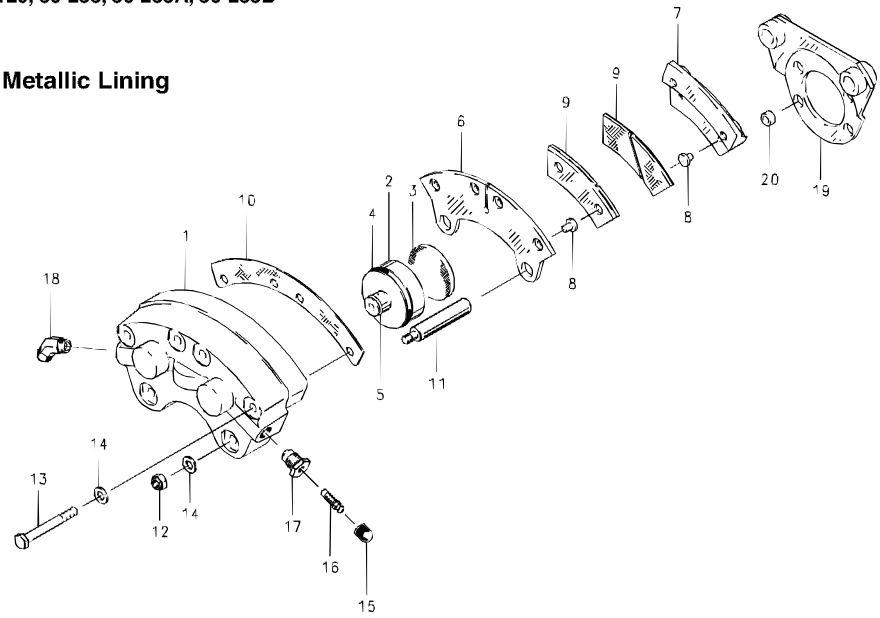

FIG.	PART NO.	DESCRIPTION	PER ASSY. 30-129	30-233	30-233A	30-233B
	091-12300	Cylinder Assembly	1			
	091-21200	Cylinder Assembly		1		
	091-21201	Cylinder Assembly			1	
	091-21202	Cylinder Assembly				1
1	061-01802	Cylinder	1	1	1	1
	092-02000	Piston Assembly	2	2	2	
	092-08600	Piston Assembly				2
2	062-01800	Piston	2	2	2	2
3	088-00100	Insulator	2	2	2	2
4	101-02700	O-Ring (MS28775-222)	2	2	2	
	101-34500	O-Ring				2
5	082-02000	Spring-Friction	2	2	2	2
	073-02700	Pressure Plate Assembly	1	1	1	1
6	063-01100	Pressure Plate	1	1	1	1
8	177-00300	Pin-Lining	4	4	4	4
9	066-06200	Lining	2	2	2	2
	074-03000	Back Plate Assembly	2	2	2	2
7	064-01500	Back Plate	2	2	2	2
8	177-00300	Pin-Lining	4	4	4	4
9	066-06200	Lining	2	2	2	2

FIG.	PART NO.	DESCRIPTION	PER ASSY. 30-129	30-233	30-233A	30-233B
10	068-01100	Shim-Insulator	1	1	1	1
11	069-00400	Anchor Bolt	2			
	069-01900	Anchor Bolt		2		2
	069-02500	Anchor Bolt			2	
12	094-10300	Nut (MS21044-N4)	2	2	2	2
13	103-11800	Bolt	4	4	4	4
14	095-10400	Washer (AN960-416)	2	2	2	2
15	183-00100	Cap-Bleeder	1	1	1	1
16	079-00300	Screw-Bleeder	1	1	1	1
17	081-00100	Seat-Bleeder	1	1	1	1
18	104-00500	Inlet Fitting (MS20823-4D)		1	1	1
19	075-01500	Torque Plate Assembly		1		1
	075-05402	Torque Plate Assembly	1			
	075-20400	Torque Plate Assembly			1	
20	145-01000	Bushing-Torque Plate		2		

30-241

Organic Lining

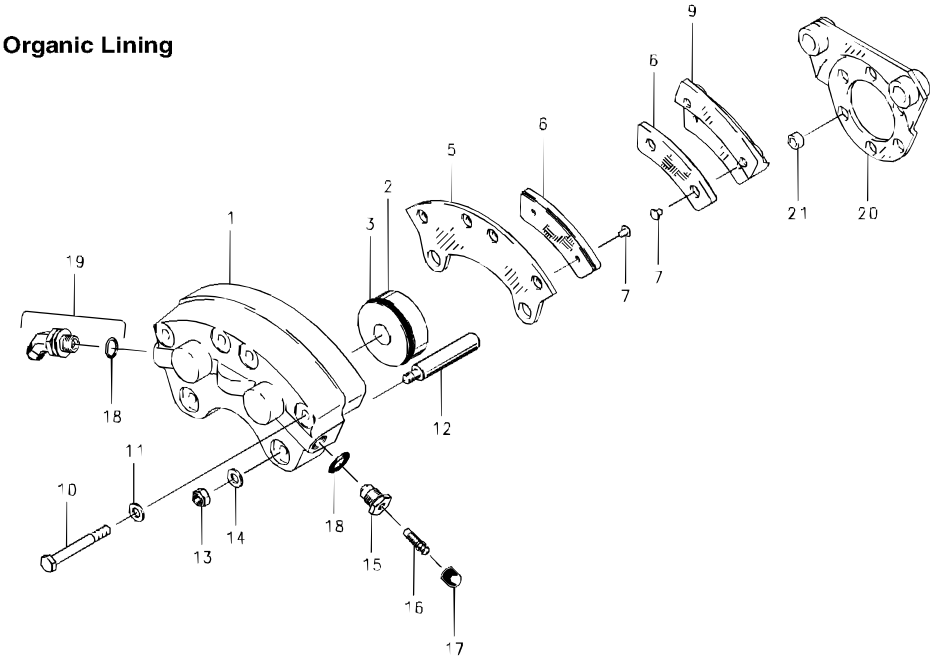

Assy. Number

A) 30-241 (1)

NOTES:

(1) High corrosion resistant, amphibious equipment

FIG.	PART NUMBER	DESCRIPTION	QTY. PER ASSY. A
	091-21600	Cylinder Assy.	1
1	061-16600	Cylinder	1
2	062-10700	Piston	2
3	101-02700	O-Ring (MS28775-222)	2
4	073-04200	Pressure Plate Assy.	1
5	063-01100	Pressure Plate	1
6	066-10500	Lining	2
7	105-00200	Rivet	4
8	074-02900	Back Plate Assy.	2
9	064-01500	Back Plate	2
6	066-10500	Lining	2
7	105-00200	Rivet	4
10	103-85500	Bolt (MS21250H04026)	4
11	095-14300	Washer (MS20002C4)	4
12	069-03100	Anchor Bolt	2
13	094-10300	Nut (MS21044-N4)	2
14	095-10400	Washer (AN960-416)	2
15	081-00200	Seat-Bleeder	1
16	079-00300	Screw-Bleeder	1
17	183-00100	Cap-Bleeder	1
18	101-00700	O-Ring (MS28775-012)	2
19	104-04700	Fitting	1
20	075-20700	Torque Plate Assy.	1
21	145-01000	Bushing	2

4

37-200-2 (30-8), 37-200A (30-72)

Organic Lining
Metallic Lining

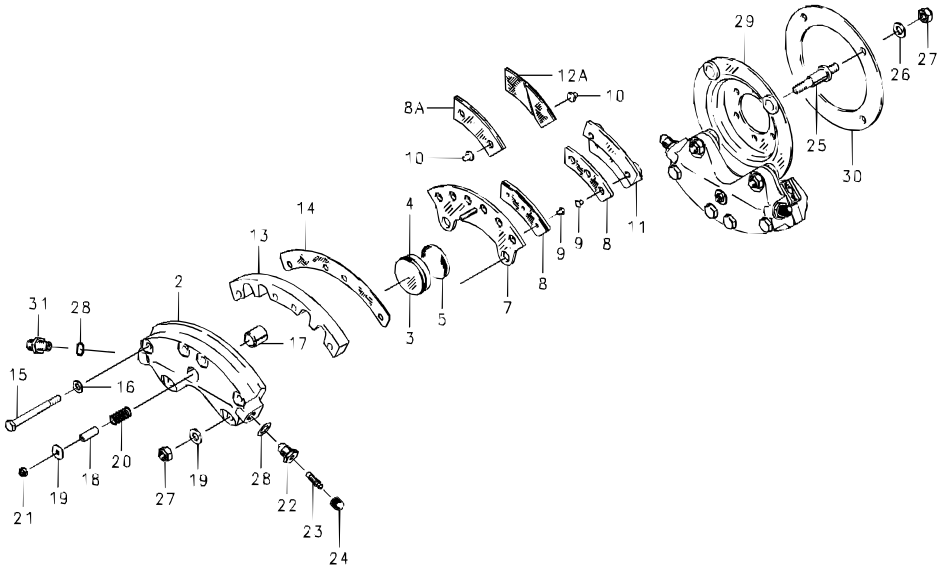

37-200-2 (30-8), 37-200A (30-72)

Organic Lining
Metallic Lining

FIG.	PART NUMBER	DESCRIPTION	QTY. PER ASSY. A	QTY. PER ASSY. B
1	091-00100	Cylinder Assy.	2	
	091-03401	Cylinder Assy.		2
2	061-00400	Cylinder	2	
	061-03000	Cylinder		2
	092-00200	Piston Assy.	4	
	092-00900	Piston Assy.		4
3	062-00300	Piston	4	
	062-00800	Piston		4
4	101-02300	O-Ring (MS28775-218)	4	4
5	088-00200	Insulator		4
	073-00200	Pressure Plate Assy.	2	
	073-02900	Pressure Plate Assy.		2
7	184-00100	Pressure Plate	2	2
8	066-10600	Lining	4	
8A	066-06500	Lining		4
9	105-00200	Rivet	12	
10	177-00300	Pin		8
	074-00200	Back Plate Assy.	4	
	074-02300	Back Plate Assy.		4
11	064-00500	Back Plate	4	4
8	066-10600	Lining	4	
12A	066-06200	Lining		4
9	105-00200	Rivet	12	
10	177-00300	Pin		8
13	068-00600	Shim	2	2
14	068-01100	Shim-Insulator		2
15	103-12400	Bolt (AN4H21A)	8	8
16	095-10200	Washer (AN960-416L)	8	8
17	071-00100	Cylinder-Retract	2	2
18	067-00400	Spacer	2	2
19	095-00200	Washer	2	2
20	082-00500	Spring	2	2
21	094-10200	Nut (NASM21083N3)	2	2
22	081-00100	Seat-Bleeder	2	
	081-00200	Seat-Bleeder		2
23	079-00300	Screw-Bleeder	2	2
24	183-00100	Cap-Bleeder	2	2
25	069-00300	Anchor Bolt	4	4
26	095-10700	Washer (AN960-516L)	8	8
27	094-10400	Nut (MS21044-N5)	8	8
31	104-00200	Fitting (AN815-4D)		2
28	101-00700	O-Ring (MS28775-012)		4
29	075-00900	Torque Plate Assy.	1	1
30	065-01000	Torque Plate	1	1

Assy. Number

A) 37-200-2 (30-8) (1)

B) 37-200A (30-72) (2)

NOTES:

(1) Organic lining.

(2) Metallic lining.

4

30-96, 30-139

Metallic Lining

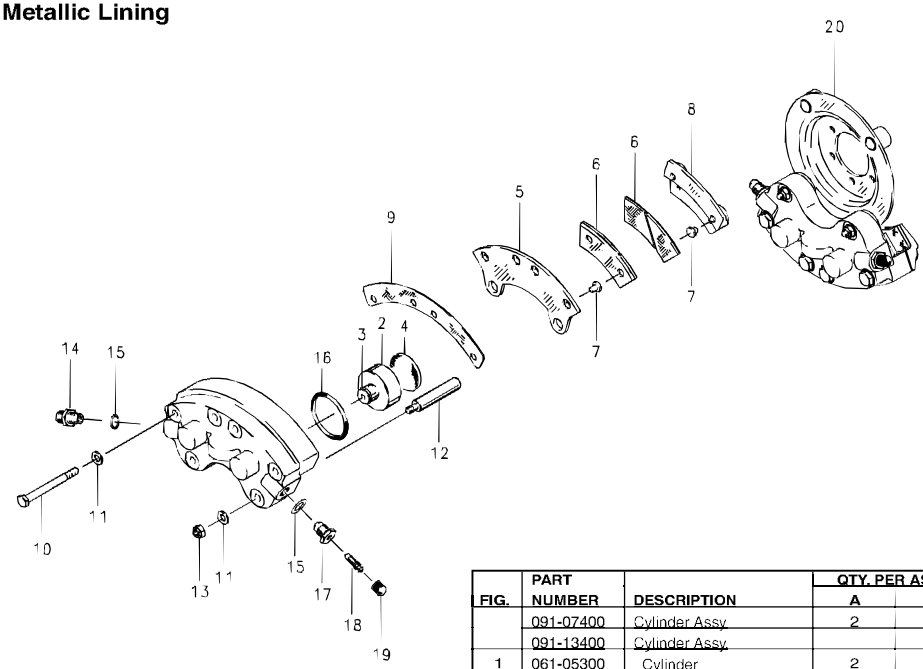

Assy. Number

A) 30-96

B) 30-139

FIG.	PART NUMBER	DESCRIPTION	QTY. PER ASSY. A	QTY. PER ASSY. B
	091-07400	Cylinder Assy.	2	
	091-13400	Cylinder Assy.		2
1	061-05300	Cylinder	2	2
	092-03000	Piston Assy.	4	4
2	062-02500	Piston	4	4
3	082-02000	Friction Spring	4	
4	088-00200	Insulator	4	4
	073-02700	Pressure Plate Assy.	2	2
5	063-01100	Pressure Plate	2	2
6	066-06200	Lining	4	4
7	177-00300	Pin	8	8
	074-02300	Back Plate Assy.	4	
	074-04400	Back Plate Assy.		4
8	064-00500	Back Plate	4	
	064-03700	Back Plate		4
6	066-06200	Lining	4	4
7	177-00300	Pin	8	8
9	068-01100	Shim-Insulator	2	2
10	103-12400	Bolt (AN4H21)	8	8
11	095-10400	Washer (AN960-416)	12	12
12	069-00400	Anchor Bolt	4	4
13	094-10300	Nut (MS21044-N4)	4	4
14	104-00200	Fitting (AN815-4D)	2	2
15	101-00700	O-Ring (MS28775-012)	4	4
16	101-02700	O-Ring (MS28775-222)	4	4
17	081-00200	Seat-Bleeder	2	2
18	079-00300	Screw-Bleeder	2	2
19	183-00100	Cap-Bleeder	2	2
20	075-10200	Torque Plate Assy.	1	1

30-66A, 30-66B

Organic Lining

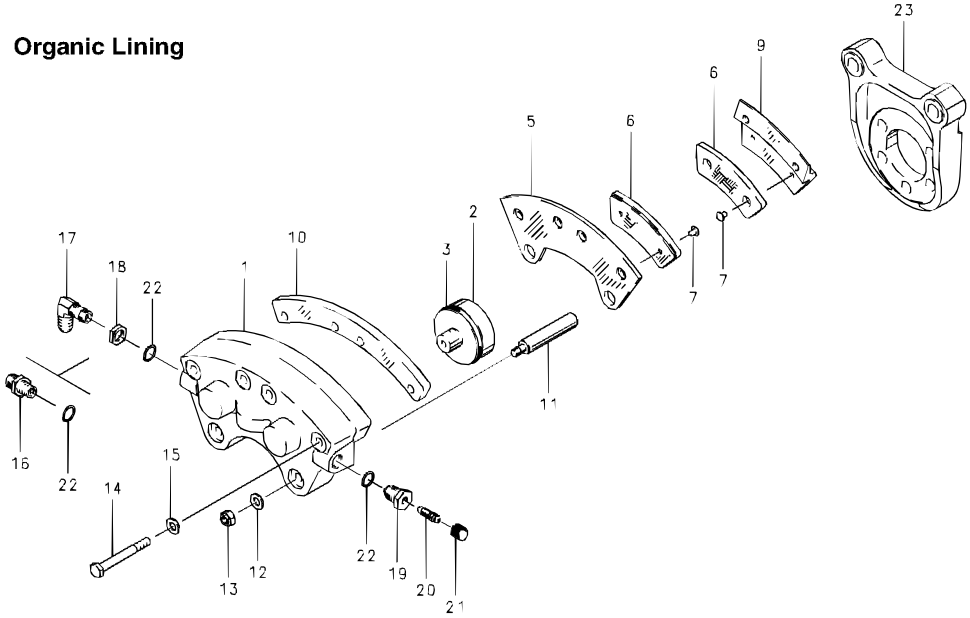

FIG.	PART NO.	DESCRIPTION	PER ASSY. 30-66A	PER ASSY. 30-66B
	091-03500	Cylinder Assembly		1
	091-05200	Cylinder Assembly	1	
1	061-02200	Cylinder	1	1
	092-01600	Piston Assembly	2	2
2	062-01500	Piston	2	2
3	101-02700	O-Ring (MS28775-222)	2	2
4	073-02100	Pressure Plate Assembly	1	1
5	063-01400	Pressure Plate	1	1
6	066-11000	Lining	2	2
7	105-00200	Rivet	4	4
8	074-01700	Back Plate Assembly	2	2
9	064-01700	Back Plate	2	2
6	066-11000	Lining	2	2
7	105-00200	Rivet	4	4
10	068-02500	Shim-Back Plate	1	1

FIG.	PART NO.	DESCRIPTION	PER ASSY. 30-66A	PER ASSY. 30-66B
11	069-00400	Anchor Bolt	2	2
12	095-10200	Washer (AN960-416L)	2	2
13	094-10300	Nut (MS21044-N4)	2	2
14	103-11800	Bolt	4	4
15	095-10400	Washer (AN960-416)	4	4
16	104-00200	Fitting (AN815-4D)	1	
17	104-02300	Fitting (AN833-4D)		1
18	094-90500	Nut (AN924-4D)		1
19	081-00200	Seat-Bleeder	1	1
20	079-00300	Screw-Bleeder	1	1
21	183-00100	Cap-Bleeder	1	1
22	101-00700	O-Ring (MS28775-012)	2	2
23	075-08800	Torque Plate Assembly	1	
	075-09800	Torque Plate Assembly		1

30-66, 30-66C, 30-66D, 30-66F, 30-66G, 30-66H, 30-69A, 30-69B, 30-74B

Metallic Lining

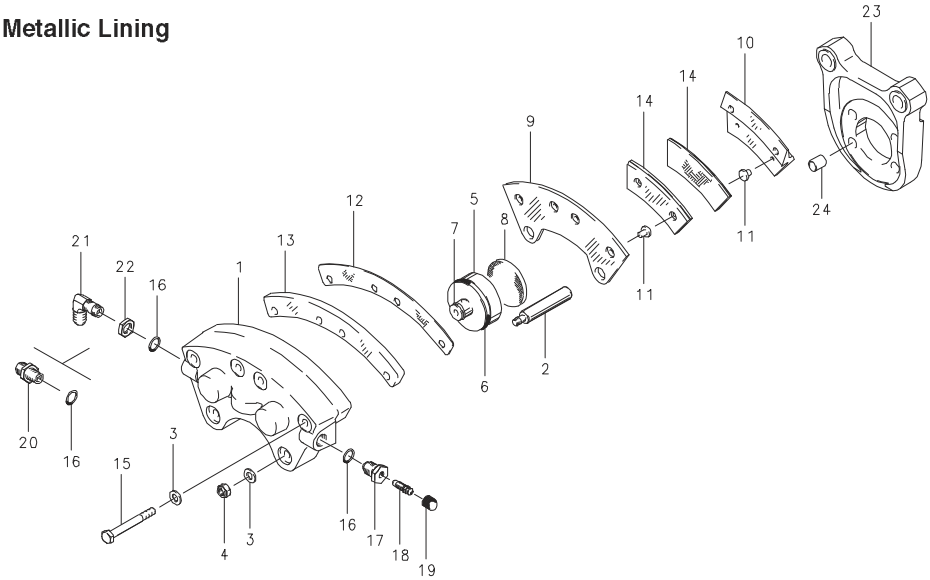

FIG.	PART NO.	DESCRIPTION	PER ASSY. 30-66	30-66C	30-66D (2) (3)	30-66F	30-66G	30-66H	30-69A	30-69B	30-74B
	091-02700	Cylinder Assembly	1								
	091-02701	Cylinder Assembly							1		
	091-02900	Cylinder Assembly		1							
	091-04200	Cylinder Assembly								1	
	091-06500	Cylinder Assembly			1			1			
	091-12500	Cylinder Assembly				1					
	091-13200	Cylinder Assembly									1
	091-15400	Cylinder Assembly					1				
1	061-02200	Cylinder	1	1	1		1	1	1	1	
	061-06100	Cylinder									1
	061-09500	Cylinder				1					
2	069-00400	Anchor Bolt	2	2	2	2	2	2	2	2	
	069-01900	Anchor Bolt									2
3	095-10200	Washer (AN960-416L)	6	6	6	6	6	6	6	6	6
4	094-10300	Nut (MS21044-N4)	2	2	2	2	2	2	2	2	2
	092-01800	Piston Assembly	2	2			2		2		
	092-02000	Piston Assembly			2	2		2		2	2
5	062-01700	Piston	2	2			2		2		
	062-01800	Piston			2	2		2		2	2
6	101-02700	O-Ring (MS28775-222)	2	2	2	2	2	2	2	2	2
7	082-02000	Spring-Friction			2	2		2		2	2
8	088-00100	Insulator	2	2	2	2	2	2	2	2	2

(Continued on next page)

30-66, 30-66C, 30-66D, 30-66F, 30-66G, 30-66H, 30-69A, 30-69B, 30-74B

Metallic Lining

(Continued from previous page)

			PER ASSY.								
FIG.	PART NO.	DESCRIPTION	30-66 (1)	30-66C	30-66D (2) (3)	30-66F	30-66G	30-66H	30-69A	30-69B	30-74B
	073-01300 (5) (6) (7)	Pressure Plate Assembly	1	1	1	1	1	1	1	1	
	073-03300	Pressure Plate Assembly									1
9	063-01400	Pressure Plate	1	1	1	1	1	1	1	1	
	063-02900	Pressure Plate									1
11	177-00300	Pin-Lining	4	4	4	4	4	4	4	4	4
	074-01200 (8) (9) (10)	Back Plate Assembly	2	2	2	2	2	2	2	2	
	074-02800	Back Plate Assembly									2
10	064-01700	Back Plate	2	2	2	2	2	2	2	2	2
11	177-00300	Pin-Lining	4	4	4	4	4	4	4	4	4
12	068-01700	Shim-Insulator	1	1	1	1	1	1	1	1	1
13	068-02500	Shim-Back Plate		1							
14	066-02200	Lining		4	4			4	4	4	
	066-04400	Lining	4			4					
	066-06700	Lining									4
	066-09700	Lining					4				
15	103-11600	Bolt									4
	103-11700	Bolt	4		4	4	4	4	4	4	
	103-11800	Bolt		4							
16	101-00600	O-Ring (MS28775-011)				1					
	101-00700	O-Ring (MS28775-012)	2	2	2		2	2	2	2	1
17	081-00200	Seat-Bleeder	1	1	1		1	1	1	1	1
	081-00500	Seat-Bleeder				1					
18	079-00300	Screw-Bleeder	1	1	1	1	1	1	1	1	1
19	183-00100	Cap-Bleeder	1	1	1	1	1	1	1	1	1
20	104-00200	Fitting (AN815-4D)	1				1		1	1	
	104-02200	Fitting (AN919-2D)			1			1			
21	104-02300	Fitting (AN833-4D)		1							
22	094-90500	Nut (AN924-4D)		1							
23	075-04000	Torque Plate Assembly	1				1				
	075-05100	Torque Plate Assembly							1		
	075-05700	Torque Plate Assembly								1	
	075-09900	Torque Plate Assembly		1							
	(4)	Torque Plate Assembly			1						
	075-12000	Torque Plate Assembly									1
	075-14700	Torque Plate Assembly				1					
	075-19800	Torque Plate Assembly						1			
24	145-02700	Bushing			2						
	145-14700	Bushing						2			

NOTES:

(1) Assemblies manufactured after 12/76 use 066-04400 lining, was 066-02200.
(2) Inactive assembly - spares support only for parts listed.
(3) 30-66D superseded by 30-66H per SB7053
(4) Inactive part - no longer available for spares support.
(5) 073-01301 is the spares replacement for 073-01300 used on 30-66C, -66H, -69A, and 30-69B, and includes items 9, 11, and 14.
(6) 073-01302 is the spares replacement for 073-01300 used on 30-66 and 30-66F, and includes items 9, 11, and 14.
(7) 073-01304 is the spares replacement for 073-01300 used on 30-66G and includes items 9, 11, and 14.
(8) 074-01201 is the spares replacement for 074-01200 used on 30-66 and 30-66F, and includes items 10, 11, and 14.
(9) 074-01202 is the spares replacement for 074-01200 used on 30-66C, -66H, -69A, and 30-69B, and includes items 10, 11, and 14.
(10) 074-01203 is the spares replacement for 074-01200 used on 30-66G and includes items 10, 11, and 14.

30-93, 30-93A, 30-93B, 30-93C, 30-93D, 30-93E, 30-145

Metallic Lining

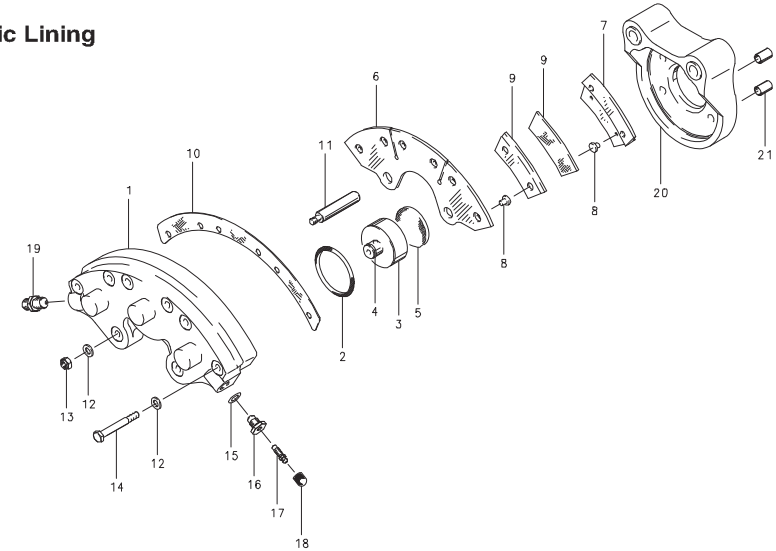

			PER ASSY.						
FIG.	PART NO.	DESCRIPTION	30-93	30-93A	30-93B	30-93C	30-93D (1) (2)	30-93E	30-145
	091-06800	Cylinder Assembly		1					
	091-06801	Cylinder Assembly	1		1		1		
	091-13700	Cylinder Assembly							1
	091-15500	Cylinder Assembly				1			
	091-19600	Cylinder Assembly						1	
	061-05200	Cylinder		1					
1	061-05201	Cylinder	1		1	1	1		1
	061-14900	Cylinder						1	
2	101-23200	O-Ring (MS28775-132)	3	3	3	3	3	3	3
	092-02800	Piston Assembly	3	3	3	3	3	3	3
3	062-02600	Piston	3	3	3	3	3	3	3
4	082-02000	Friction Ring	3	3	3	3	3	3	3
5	088-00100	Insulator	3	3	3	3	3	3	3
	073-02500 (3) (4) (5)	Pressure Plate Assembly	1	1	1	1	1	1	
	073-06100 (6)	Pressure Plate Assembly							1
6	063-02400	Pressure Plate	1	1	1	1	1	1	1
8	177-00300	Pin	6	6	6	6	6	6	6

(Continued on next page)

30-93, 30-93A, 30-93B, 30-93C, 30-93D, 30-93E, 30-145

Metallic Lining

(Continued from previous page)

			PER ASSY.						
FIG.	PART NO.	DESCRIPTION	30-93	30-93A	30-93B	30-93C	30-93D (1) (2)	30-93E	30-145
	074-01200 (7) (8) (9)	Back Plate Assembly	3	3	3	3	3	3	
	074-04600 (10)	Back Plate Assembly							3
7	064-01700	Back Plate	3	3	3	3	3	3	
	064-03900	Back Plate							3
8	177-00300	Pin	6	6	6	6	6	6	6
9	066-02200	Lining		6					
	066-04400	Lining	6		6		6	6	
	066-09700	Lining				6			6
10	068-02700	Shim-Insulator	1	1	1	1	1	1	1
11	069-00400	Anchor Bolt	2	2	2	2	2		2
	069-02500	Anchor Bolt						2	
12	095-10200	Washer (AN960-416L)	8	8	8	8	8	2	8
	095-14600	Washer (MS14144-4)						6	
13	094-10300	Nut (MS21044-N4)	2	2	2	2	2	2	2
14	103-11700	Bolt	6	6	6	6	6		6
	103-85500	Bolt (MS28775-012)						6	
15	101-00700	O-Ring (MS28775-012)	1	1	1	1	1	2	1
16	081-00200	Seat-Bleeder	1	1	1	1	1	1	1
17	079-00300	Screw-Bleeder	1	1	1	1	1	1	1
18	183-00100	Cap-Bleeder	1	1	1	1	1	1	1
19	104-02200	Fitting (AN919-2D)						1	
20	075-10900	Torque Plate Assembly		1					
	075-10901	Torque Plate Assembly	1						
	075-12700	Torque Plate Assembly			1	1			
	075-15400	Torque Plate Assembly							1
	075-18700	Torque Plate Assembly						1	
	075-17700 (1)	Torque Plate Assembly					1		
	075-17750 (1)	Torque Plate Assembly					1		
21	145-13600	Bushing						2	

NOTES:

(1) Uses 075-17700 for left hand brake and 075-17750 for right hand brake.

(2) When reordering, specify LH or RH.

(3) 073-02501 is the spares replacement for 073-02500 used on 30-93A and includes items 6, 8, and 9.

(4) 073-02502 is the spares replacement for 073-02500 used on 30-93, -93B, -93D, and 30-93E and includes items 6, 8, and 9.

(5) 073-02503 is the spares replacement for 073-02500 used on 30-93C and includes items 6, 8, and 9.

(6) 073-06101 is the spares replacement for 073-06100 used on 30-145 and includes items 6, 8, and 9.

(7) 074-01201 is the spares replacement for 074-01200 used on 30-93, -93B, -93D, and 30-93E and includes items 7, 8, and 9.

(8) 074-01202 is the spares replacement for 074-01200 used on 30-93A and includes items 7, 8, and 9.

(9) 074-01203 is the spares replacement for 074-01200 used on 30-93C and includes items 7, 8, and 9.

(10) 074-04601 is the spares replacement for 074-04600 used on 30-145 and includes items 7, 8, and 9.

30-88

Metallic Lining

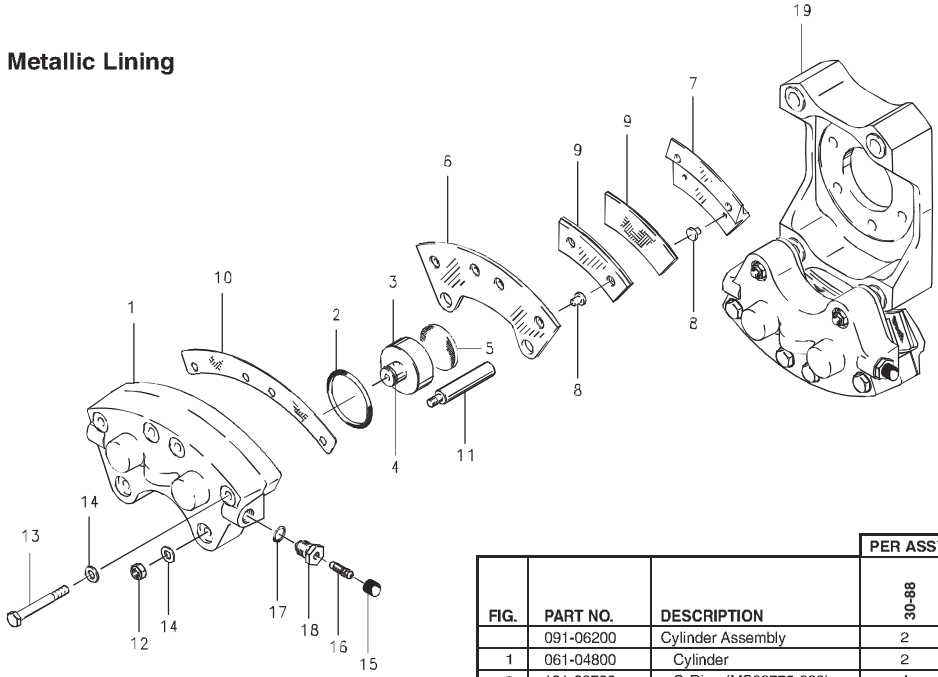

FIG.	PART NO.	DESCRIPTION	PER ASSY. 30-88
	091-06200	Cylinder Assembly	2
1	061-04800	Cylinder	2
2	101-02700	O-Ring (MS28775-222)	4
	092-02600	Piston Assembly	4
3	062-02500	Piston	4
4	082-02000	Spring-Friction	4
5	088-00200	Insulator	4
	073-01300 (2)	Pressure Plate Assembly	2
6	063-01400	Pressure Plate	2
8	177-00300	Pin	8
	074-01200 (3)	Back Plate Assembly	4
7	064-01700	Back Plate	4
8	177-00300	Pin	8
9	066-02200	Lining	8
10	068-01700	Shim-Insulator	2
11	069-00400	Anchor Bolt	4
12	094-10300	Nut (MS21044-N4)	4
13	103-11800	Bolt	8
14	095-10200	Washer (AN960-416L)	12
15	183-00100	Cap-Bleeder	2
16	079-00300	Screw-Bleeder	2
17	101-00700	O-Ring (MS28775-012)	2
18	081-00200	Seat-Bleeder	2
19	075-10100	Torque Plate Assembly (ref)	Note (1)
	075-10150	Torque Plate Assembly (ref)	Note (1)

NOTES:

(1) Uses 075-10100 Torque Plate for left hand Brake; 075-10150 Torque Plate for right hand Brake – order separately from airframe manufacturer.

(2) 073-01301 is the spares replacement for 073-01300 and includes items 6, 8, and 9.

(3) 074-01202 is the spares replacement for 074-01200 and includes items 7, 8, and 9.

This page intentionally left blank

30-146, 30-146A, 30-220

Metallic Lining

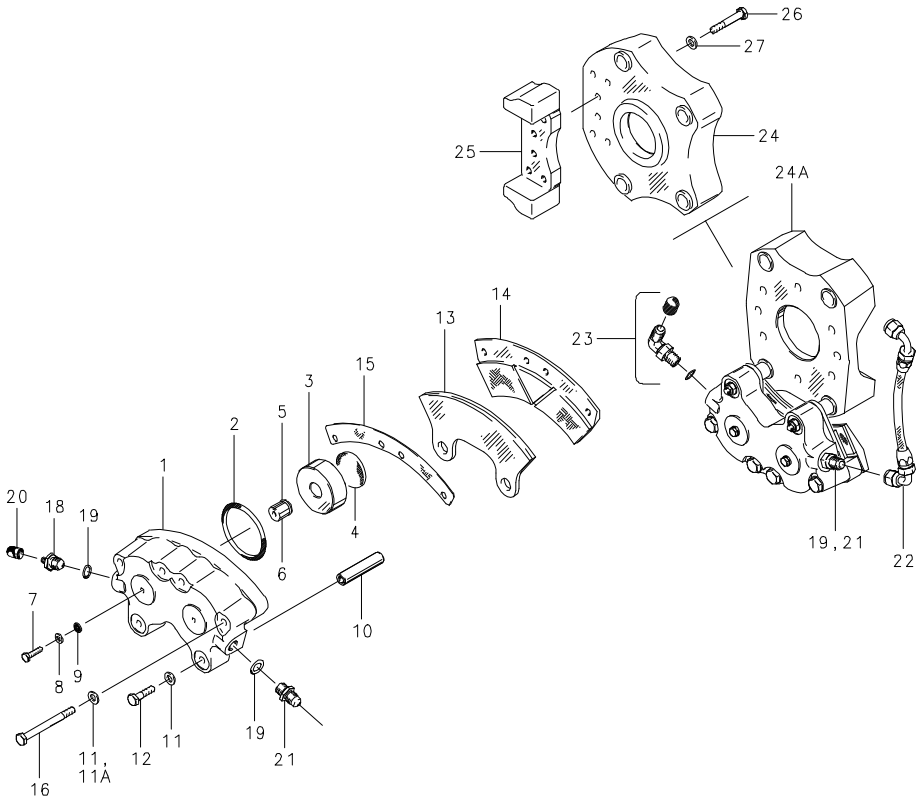

30-146, 30-146A, 30-220

Metallic Lining

FIG.	PART NO.	DESCRIPTION	PER ASSY. 30-146 (2)	30-146A	30-220
	091-14000	Cylinder Assembly	2	2	
	091-20600	Cylinder Assembly			2
1	061-10700	Cylinder	2	2	2
2	101-26500	O-Ring (MS28775-225)	4	4	4
	092-05200	Piston Assembly	4	4	4
3	062-05600	Piston	4	4	4
4	088-00200	Insulator	4	4	4
5	082-02000	Friction Spring	4	4	4
6	139-09300	Piston Guide	4	4	4
7	103-00100	Bolt (AN3-5A)	4	4	4
8	095-10800	Washer (AN960-10L)	4	4	4
9	095-02600	Stat-O-Seal	4	4	4
10	069-02000	Anchor Bolt	4	4	
	069-02700	Anchor Bolt			4
11	095-10200	Washer (AN960-416L)	12	12	4
11A	095-14300	Washer (MS20002C4)			8
12	103-10100	Bolt (AN4H5A)	4	4	4
13	066-09100	Pressure Plate/Lining Assembly	2	2	
	066-13500	Pressure Plate/Lining Assembly			2
14	066-09200	Back Plate/Lining Assembly	2	2	
	066-13700	Back Plate/Lining Assembly			2
15	068-04100	Shim-Insulator	2	2	2
16	103-11800	Bolt	8	8	
	103-85500	Bolt (MS21250H04026)			8
17	081-00200	Seat-Bleeder	1	1	1
18	079-00300	Screw-Bleeder	1	1	1
19	101-24600	O-Ring	3	3	3
20	183-00100	Cap-Bleeder	1	1	1
21	104-04700	Fitting	2		
	104-04900	Fitting		2	2
22	207-01600	Hose Assembly			1
	207-00400	Hose Assembly		1	
	207-07600	Hose Assembly	1		
23	104-03100	Fitting	1		1
24A	075-17300	Torque Plate Assembly		1	
24	075-16200	Torque Plate Assembly	1		1
	075-16201	Torque Plate (1)	1		1
25	110-05800	Torque Backup Plate	1		1
26	103-10300	Bolt (AN4-10A)	6		6
27	095-10400	Washer (AN960-416)	6		6

NOTES:

(1) 075-16201 Torque Plate is for spares replacement only. It does not include item 25, 110-05800 Torque Backup Plate; item 26, 103-10300 Bolts; or item 27, 095-10400 Washers.

(2) 199-267 Hose Replacement Upgrade Kit available. Refer to PRM93.

30-67, 30-67A, 30-67B, 30-67C, 30-67D, 30-67X, 30-176, 30-195

Organic Lining

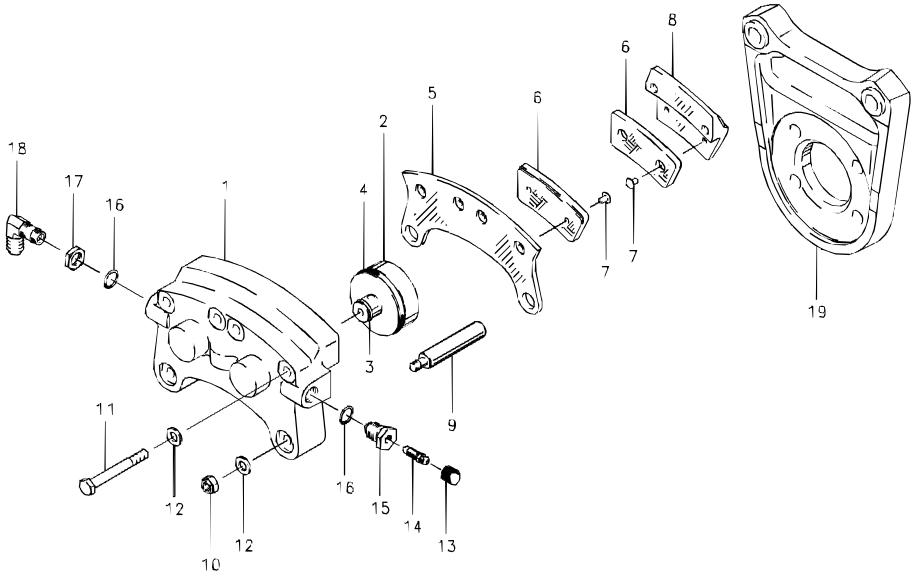

30-67, 30-67A, 30-67B, 30-67C, 30-67D, 30-67X, 30-176, 30-195

Organic Lining

			PER ASSY.							
FIG.	PART NO.	DESCRIPTION	30-67	30-67A	30-67B	30-67C	30-67D	30-67X (1)	30-176	30-195
	091-03000	Cylinder Assembly	1			1	1			1
	091-03001	Cylinder Assembly						1		
	091-03100	Cylinder Assembly		1					1	
	091-04900	Cylinder Assembly			1					
1	061-02800	Cylinder	1		1	1	1	1		1
	061-02900	Cylinder		1					1	
	092-01600	Piston Assembly	2	2		2	2	2	2	2
	092-02100	Piston Assembly			2					
	092-07100	Piston Assembly			2					
2	062-01500	Piston	2	2		2	2	2	2	2
	062-01900	Piston			2					
3	082-02000	Friction Spring			2					
4	101-02700	O-Ring (MS28775-222)	2	2	2	2	2		2	2
	101-23100	O-Ring						2		
	073-01500	Pressure Plate Assembly	1	1	1	1	1	1	1	1
5	063-01500	Pressure Plate	1	1	1	1	1	1	1	1
6	066-10800	Lining	2	2	2	2	2	2	2	2
7	105-00200	Rivet	4	4	4	4	4	4	4	4
	074-01300	Back Plate Assembly	2	2	2	2	2	2	2	2
8	064-01600	Back Plate	2	2	2	2	2	2	2	2
6	066-10800	Lining	2	2	2	2	2	2	2	2
7	105-00200	Rivet	4	4	4	4	4	4	4	4
9	069-00400	Anchor Bolt	2	2	2	2	2	2	2	2
10	094-10300	Nut (MS21044-N4)	2	2	2	2	2	2	2	2
11	103-11600	Bolt		4					4	
	103-11700	Bolt	4		4	4	4	4		4
12	095-10400	Washer (AN960-416)	6	6	6	6	6	6	6	6
13	183-00100	Cap-Bleeder	1	1	1	1	1	1	1	1
14	079-00300	Screw-Bleeder	1	1	1	1	1	1	1	1
15	081-00200	Seat-Bleeder	1	1	1	1	1	1	1	1
16	101-00700	O-Ring (MS28775-012)	1	1	2	1	1		1	
	101-23000	O-Ring						1		
17	094-90500	Nut (AN924-4D)			1					
18	104-02300	Fitting (AN833-4D)			1					
19	075-04100	Torque Plate Assembly	1							
	075-04200	Torque Plate Assembly		1		1				
	075-07200	Torque Plate Assembly			1				1	
	075-10000	Torque Plate Assembly					1			
	075-10300	Torque Plate Assembly						1		
	075-17400	Torque Plate Assembly								1

NOTES:

(1) This brake uses automotive brake fluid.

4

30-89, 30-89A, 30-89B, 30-89C, 30-89E

Organic Lining

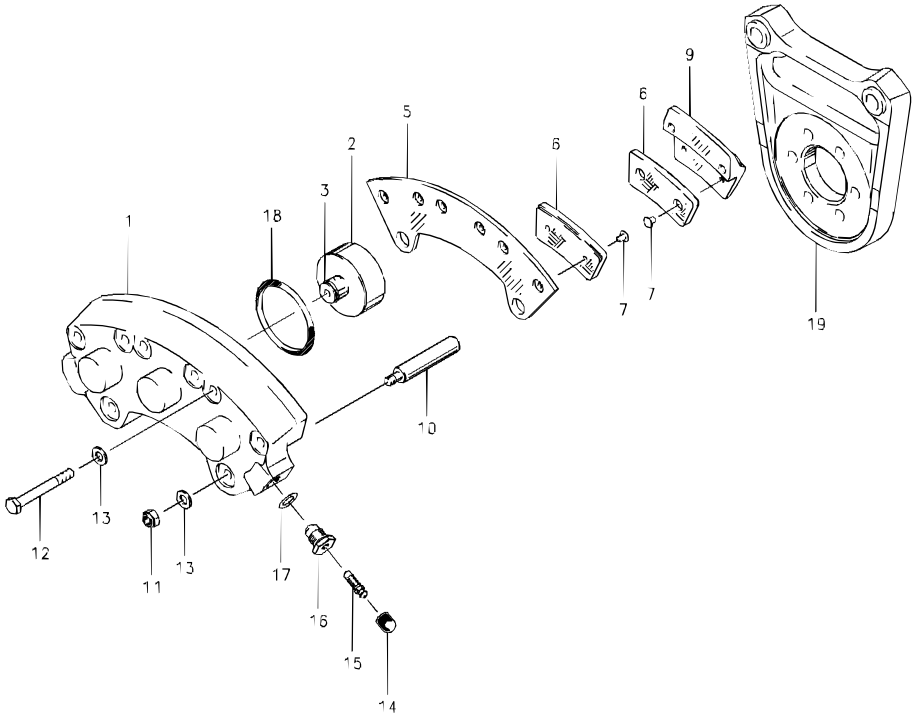

30-89, 30-89A, 30-89B, 30-89C, 30-89E

Organic Lining

FIG.	PART NUMBER	DESCRIPTION	QTY. PER ASSY. A	B	C	D	E
	091-07700	Cylinder Assy.	1	1	1	1	1
1	061-05800	Cylinder	1	1	1	1	1
	092-02900	Piston Assy.	3	3	3	3	3
2	062-02700	Piston	3	3	3	3	3
3	082-02000	Friction Spring	3	3	3	3	3
4	073-03000	Pressure Plate Assy.	1	1	1	1	1
5	063-01300	Pressure Plate	1	1	1	1	1
6	066-10800	Lining	3	3	3	3	3
7	105-00200	Rivet	6	6	6	6	6
8	074-02600	Back Plate Assy.	3	3	3	3	3
9	064-01600	Back Plate	3	3	3	3	3
6	066-10800	Lining	3	3	3	3	3
7	105-00200	Rivet	6	6	6	6	6
10	069-00400	Anchor Bolt	2	2	2	2	2
11	094-10003	Nut (MS21044-N4)	2	2	2	2	2
12	103-11700	Bolt	6	6	6	6	6
13	095-10200	Washer (AN960-416L)	8	8	8	8	8
14	183-00100	Cap-Bleeder	1	1	1	1	1
15	079-00300	Screw-Bleeder	1	1	1	1	1
16	081-00200	Seat-Bleeder	1	1	1	1	1
17	101-00700	O-Ring (MS28775-012)	1	1	1	1	1
18	101-23200	O-Ring (MS28775-132)	3	3	3	3	3
19	075-10000	Torque Plate Assy.			1		
	075-04100	Torque Plate Assy.		1			
	075-18200	Torque Plate Assy.				1	
	075-11500	Torque Plate Assy.	1				
	075-11502	Torque Plate Assy.					1

Assy. Number

A) 30-89 (1) (2)

B) 30-89A (3)

C) 30-89B (3)

D) 30-89C

E) 30-89E (4)

NOTES:

(1) Uses 075-11500 Torque Plate Assy. for left hand brake and 075-11550 for right hand brake.

(2) When reordering, specify LH or RH.

(3) This brake is not FAA TSO approved – order from airframe manufacturer only.

(4) Uses 075-11502 Torque Plate Assy. for left hand brake and 075-11552 for right hand brake.

30-28B, 30-28C, 30-28D, 30-68, 30-68A, 30-68B

Metallic Lining

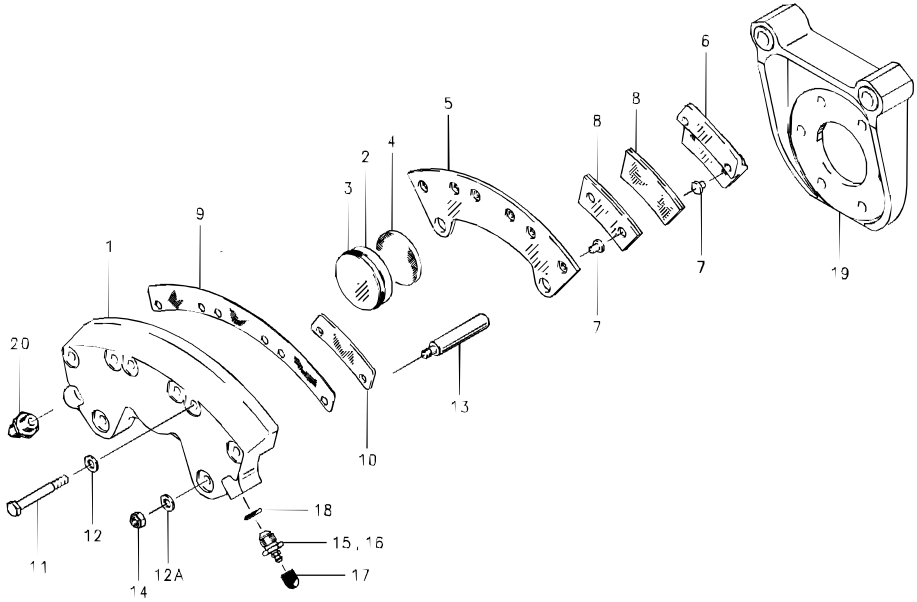

30-28B, 30-28C, 30-28D, 30-68, 30-68A, 30-68B

Metallic Lining

			PER ASSY.					
FIG.	PART NO.	DESCRIPTION	30-28B	30-28C	30-28D	30-68	30-68A (1) (2)	30-68B
	091-01002	Cylinder Assembly	1					
	091-01003	Cylinder Assembly		1				
	091-01004	Cylinder Assembly			1			
	091-01100	Cylinder Assembly				1		
	091-06100	Cylinder Assembly						1
1	061-02600	Cylinder	1	1	1			
	061-03400	Cylinder				1	1	
	061-03401	Cylinder						1
	092-00800	Piston Assembly	3	3	3	3	3	3
2	062-00700	Piston	3	3	3	3	3	3
3	101-02700	O-Ring (MS28775-222)	3	3	3	3	3	3
4	088-00100	Insulator	3	3	3	3	3	3
	073-00500 (4)	Pressure Plate Assembly	1	1	1	1	1	1
5	063-00700	Pressure Plate	1	1	1	1	1	1
7	177-00400	Pin	6	6	6	6	6	6
	074-00500 (5)	Back Plate Assembly	3	3		3	3	3
	074-02500 (6)	Back Plate Assembly			3			
6	064-02700	Back Plate	3	3	3	3	3	3
7	177-00400	Pin	6	6	6	6	6	6
8	066-03300	Lining	6	6	6	6	6	6
9	068-01600	Shim-Back Plate	1	1	1	1	1	1
10	(3)	Shim-Back Plate					3	
11	103-12000	Bolt	6	6	6			
	103-12100	Bolt (AN4H15A)				6		
	103-12200	Bolt (AN4H16A)					6	6
12	095-10400	Washer (AN960-416)	6	6	6		8	8
12A	095-10200	Washer (AN960-416L)	2	2	2	8		
13	069-00400	Anchor Bolt	2	2	2	2	2	2
14	094-10300	Nut (MS21044-N4)	2	2	2	2	2	2
15	081-00200	Seat-Bleeder	1	1	1	1	1	1
16	079-00300	Screw-Bleeder	1	1	1	1	1	1
17	183-00100	Cap-Bleeder	1	1	1	1	1	1
18	101-00700	O-Ring (MS28775-012)	1	2	1	1	1	1
20	104-00200	Fitting (AN815-4D)		1				
19	075-01902	Torque Plate Assembly	1					
	075-01903	Torque Plate Assembly			1			
	075-04300	Torque Plate Assembly				1	1	1
	075-08900	Torque Plate Assembly		1				

NOTES:

(1) Inactive assembly – spares support only for parts listed.

(2) 30-68A superseded by 30-68B.

(3) Inactive part – no longer available for spares support.

(4) 073-00501 is the spares replacement for 073-00500 and includes items 5, 7, and 8.

(5) 074-00501 is the spares replacement for 074-00500 and includes items 6, 7, and 8.

(6) 074-02501 is the spares replacement for 074-02500 and includes items 6, 7, and 8.

30-143

Metallic Lining

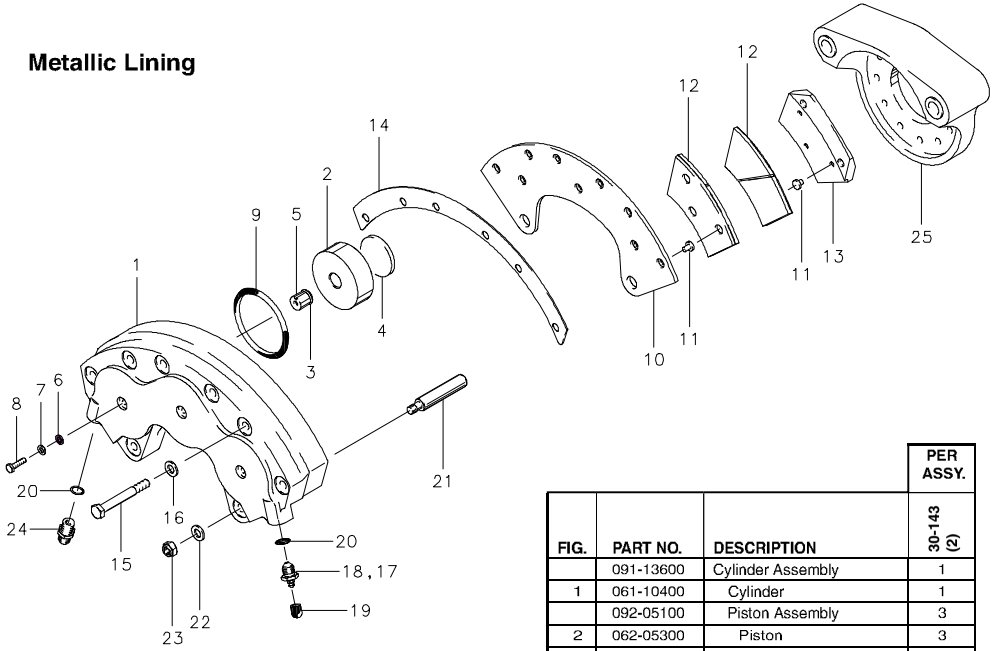

NOTES:

(1) Use 075-15300 Torque Plate Assy. for left hand brake and 075-15900 for right hand brake.

(2) When reordering, specify LH or RH.

FIG.	PART NO.	DESCRIPTION	PER ASSY. 30-143 (2)
	091-13600	Cylinder Assembly	1
1	061-10400	Cylinder	1
	092-05100	Piston Assembly	3
2	062-05300	Piston	3
3	082-02000	Friction Spring	3
4	088-00100	Insulator	3
5	139-08100	Piston Guide	3
6	095-02600	Stat-O-Seal	3
7	095-10800	Washer (AN960-10L)	3
8	103-00100	Bolt (AN3-5A)	3
9	101-25700	O-Ring (MS28775-229)	3
	073-06000	Pressure Plate Assembly	1
10	063-04700	Pressure Plate	1
11	177-01600	Pin	9
12	066-07300	Lining	3
	074-04500	Back Plate Assembly	3
13	064-03800	Back Plate	3
11	177-01600	Pin	9
12	066-07300	Lining	3
14	068-04000	Shim-Insulator	1
15	103-22500	Bolt (AN5H-22A)	6
16	095-10500	Washer (AN960-516)	6
17	081-00200	Seat-Bleeder	1
18	079-00300	Screw-Bleeder	1
19	183-00100	Cap-Bleeder	1
20	101-00700	O-Ring (MS28775-012)	2
21	069-01200	Anchor Bolt	2
22	095-10700	Washer (AN960-516L)	2
23	094-10400	Nut (MS21044-N5)	2
24	104-00200	Fitting (AN815-4D)	1
25	(1)	Torque Plate Assembly	1

30-84, 30-94, 30-111, 30-184 LH, 30-184 RH

Organic Lining

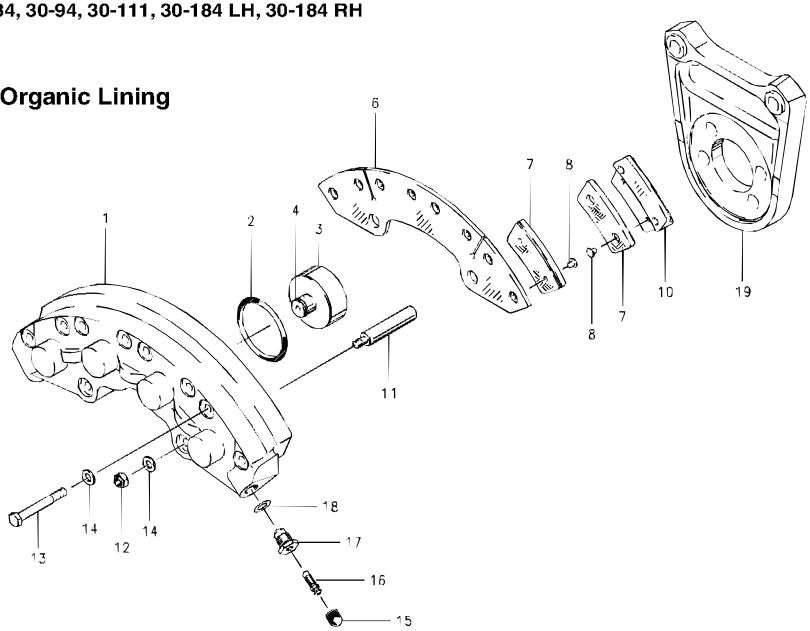

Assy. Number

A) 30-84

B) 30-94

C) 30-111 (1) (2)

D) 30-184 LH (2)

E) 30-184 RH (2)

NOTES:

(1) This brake uses automotive type brake fluid.

(2) This brake is not FAA TSO approved – order from airframe manufacturer only.

FIG.	PART NUMBER	DESCRIPTION	QTY. PER ASSY. A	B	C	D	E
	091-07200	Cylinder Assy.		1			
	091-07201	Cylinder Assy.			1		
	091-17600	Cylinder Assy.				1	1
1	061-05500	Cylinder	1	1	1	1	1
2	101-23200	O-Ring (MS28775-132)	4	4		4	4
	101-23400	O-Ring			4		
	092-02900	Piston Assy.	4	4	4	4	4
3	062-02700	Piston	4	4	4	4	4
4	082-02000	Friction Spring	4	4	4	4	4
5	073-02600	Pressure Plate Assy.	1	1	1	1	1
6	063-02500	Pressure Plate	1	1	1	1	1
7	066-10800	Lining	4	4	4	4	4
8	105-00200	Rivet	8	8	8	8	8
9	074-02200	Back Plate Assy.	4	4	4	4	4
10	064-01600	Back Plate	4	4	4	4	4
7	066-10800	Lining	4	4	4	4	4
8	105-00200	Rivet	8	8	8	8	8
11	069-00400	Anchor Bolt	2	2	2	2	2
12	094-10300	Nut (MS21044-N4)	2	2	2	2	2
13	103-11800	Bolt	8	8	8	8	8
14	095-10400	Washer (AN960-416)	10	10	10	10	10
15	183-00100	Cap-Bleeder	1	1	1	1	1
16	079-00300	Screw-Bleeder	1	1	1	1	1
17	081-00200	Seat-Bleeder	1	1	1	1	1
18	101-00700	O-Ring (MS28775-012)	1	1		1	1
	101-23000	O-Ring			1		
19	075-11000	Torque Plate Assy.		1			
	075-11501	Torque Plate Assy.				1	
	075-13500	Torque Plate Assy.			1		
	075-11551	Torque Plate Assy.					1

4

30-95, 30-95A, 30-95B, 30-99, 30-100

Metallic Lining

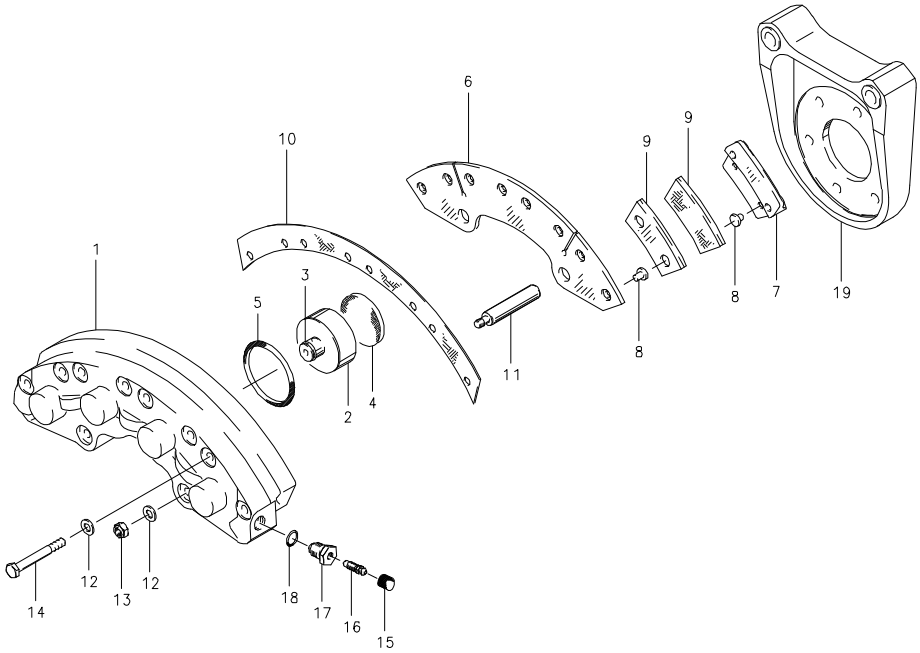

30-95, 30-95A, 30-95B, 30-99, 30-100

Metallic Lining

			PER ASSY.				
FIG.	PART NO.	DESCRIPTION	30-95 (1) (2) (3)	30-95A (3) (4)	30-95B (3) (4)	30-99	30-100
	091-08000	Cylinder Assembly					1
	091-09100	Cylinder Assembly				1	
	091-10100	Cylinder Assembly		1			
	091-13800	Cylinder Assembly			1		
1	061-04900	Cylinder		1	1	1	
	061-05400	Cylinder					1
	(5)	Cylinder	1				
	092-02800	Piston Assembly	4				
	092-03400	Piston Assembly					4
	092-03700	Piston Assembly		4	4	4	
2	062-02600	Piston	4				
	062-03200	Piston		4	4	4	4
3	082-02000	Friction Spring	4	4	4	4	4
4	088-00100	Insulator	4	4	4	4	4
5	101-23200	O-Ring (MS28775-132)	4	4		4	4
	101-26200	O-Ring			4		
	073-03200 (6)	Pressure Plate Assembly	1				
	073-04000 (7)	Pressure Plate Assembly		1	1	1	1
6	063-02600	Pressure Plate	1	1	1	1	1
8	177-00400	Pin-Lining	8				
	177-01600	Pin-Lining		8	8	8	8
9	066-03300	Lining	4				
	066-06600	Lining		4	4	4	4
	074-02500 (8)	Back Plate Assembly	4				
	074-03200 (9)	Back Plate Assembly		4	4	4	
	074-03400 (10)	Back Plate Assembly					4
7	064-02700	Back Plate	4	4	4	4	4
8	177-00400	Pin-Lining	8				
	177-01600	Pin-Lining		8	8	8	8
9	066-03300	Lining	4				
	066-06600	Lining		4	4	4	4
10	068-02800	Shim-Insulator	1	1	1	1	
	068-03100	Shim-Insulator					1
11	069-00400	Anchor Bolt	2	2	2		2
	069-01900	Anchor Bolt				2	
12	095-10200	Washer (AN960-416L)	10	10	10	10	10
13	094-10300	Nut (MS21044-N4)	2	2	2	2	2
14	103-10400	Bolt (AN4-15A)	8				
	103-11800	Bolt				8	8
	103-12400	Bolt (AN4H-21A)		8	8		
15	183-00100	Cap-Bleeder	1	1	1	1	1
16	079-00300	Screw-Bleeder	1	1	1	1	1
17	081-00200	Seat-Bleeder	1	1	1	1	1
18	101-00700	O-Ring (MS28775-012)	1	1	1	1	1
19	075-01902	Torque Plate Assembly					1
	075-11800	Torque Plate Assembly				1	

NOTES:

(1) 30-95 superseded by 30-95A LH.

(2) Inactive assembly – spares support only for parts listed.

(3) Uses 075-11100 Torque Plate Assy. for left hand brake and 075-11150 Torque Plate Assy. for right hand brake.

(4) When reordering, specify LH or RH.

(5) Inactive part – no longer available for spares support.

(6) 073-03201 is the spares replacement for 073-03200 and includes items 6, 8, and 9.

(7) 073-04001 is the spares replacement for 073-04000 and includes items 6, 8, and 9.

(8) 074-02501 is the spares replacement for 074-02500 and includes items 7, 8, and 9.

(9) 074-03201 is the spares replacement for 074-03200 and includes items 7, 8, and 9.

(10) 074-03401 is the spares replacement for 074-03400 and includes items 7, 8, and 9.

30-97, 30-113, 30-113A

Metallic Lining

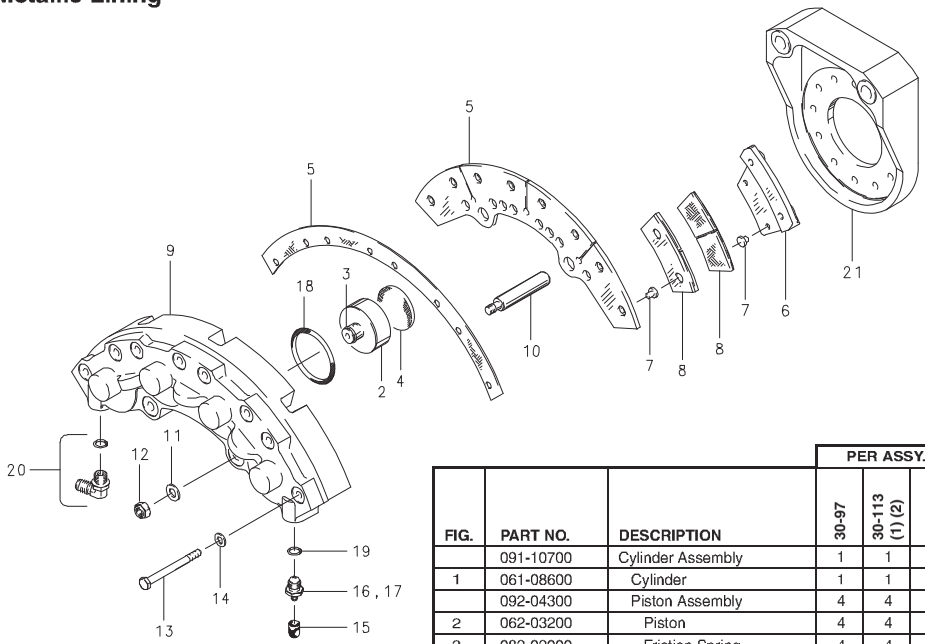

FIG.	PART NO.	DESCRIPTION	PER ASSY. 30-97	30-113 (1) (2)	30-114A
	091-10700	Cylinder Assembly	1	1	1
1	061-08600	Cylinder	1	1	1
	092-04300	Piston Assembly	4	4	4
2	062-03200	Piston	4	4	4
3	082-02000	Friction Spring	4	4	4
4	088-00100	Insulator	4	4	4
	073-04900 (3)	Pressure Plate Assembly	1	1	1
5	063-03600	Pressure Plate	1	1	1
7	177-01600	Pin	8	8	8
	074-02400 (4)	Back Plate Assembly	4	4	4
6	064-02400	Back Plate	4	4	4
7	177-01600	Pin	8	8	8
8	066-06400	Lining	8	8	8
9	068-02900	Shim-Insulator	1	1	1
10	069-01200	Anchor Bolt	2	2	2
11	095-10700	Washer (AN960-516L)	2	2	2
12	094-10400	Nut (MS21044-N5)	2	2	2
13	103-14300	Bolt	8	8	8
14	095-10400	Washer (AN960-416)	8	8	8
15	183-00100	Cap-Bleeder	1	1	1
16	079-00300	Screw-Bleeder	1	1	1
17	081-00200	Seat-Bleeder	1	1	1
18	101-05200	O-Ring (MS28775-224)	4	4	4
19	101-00700	O-Ring (MS28775-012)	1	1	1
20	104-03100	Fitting	1		
21	075-11300	Torque Plate Assembly	1		
	075-13900	Torque Plate Assembly		1	1

NOTES:

(1) Inactive assembly – spares support only for parts listed.

(2) 30-113 superseded by 30-113A.

(3) 073-04901 is the spares replacement for 073-04900 and includes items 5, 7, and 8.

(4) 074-02401 is the spares replacement for 074-02400 and includes items 6, 7, and 8.

30-131

Metallic Lining

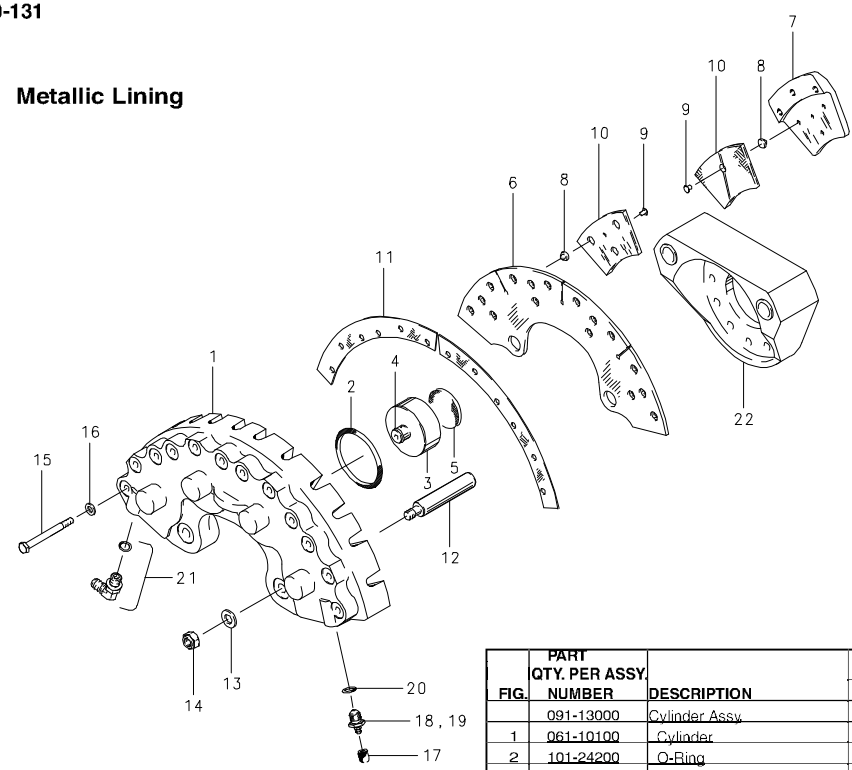

FIG.	PART NUMBER	DESCRIPTION	QTY. PER ASSY. A
	091-13000	Cylinder Assy.	1
1	061-10100	Cylinder	1
2	101-24200	O-Ring	4
	092-05300	Piston Assy.	4
3	062-05400	Piston	4
4	082-02000	Friction Spring	4
5	088-00100	Insulator	4
	073-05700	Pressure Plate Assy.	1
6	063-04400	Pressure Plate	1
	074-04700	Back Plate Assy.	4
7	064-03200	Back Plate	4
8	177-01600	Pin	24
9	105-00200	Rivet	8
10	066-09000	Lining	8
11	068-03300	Shim-Insulator	2
12	069-01800	Anchor Bolt	2
13	095-10600	Washer (AN960-616)	2
14	094-10100	Nut (MS21042-6)	2
15	103-14500	Bolt	12
16	095-10400	Washer (AN960-416)	12
17	183-00100	Cap-Bleeder	1
18	079-00300	Screw-Bleeder	1
19	081-00200	Seat-Bleeder	1
20	101-00700	O-Ring (MS28775-012)	1
21	104-03100	Fitting	1
22	075-15000	Torque Plate Assy	1

Assy. Number

A) 30-131

4

30-163, 30-182

Metallic Lining

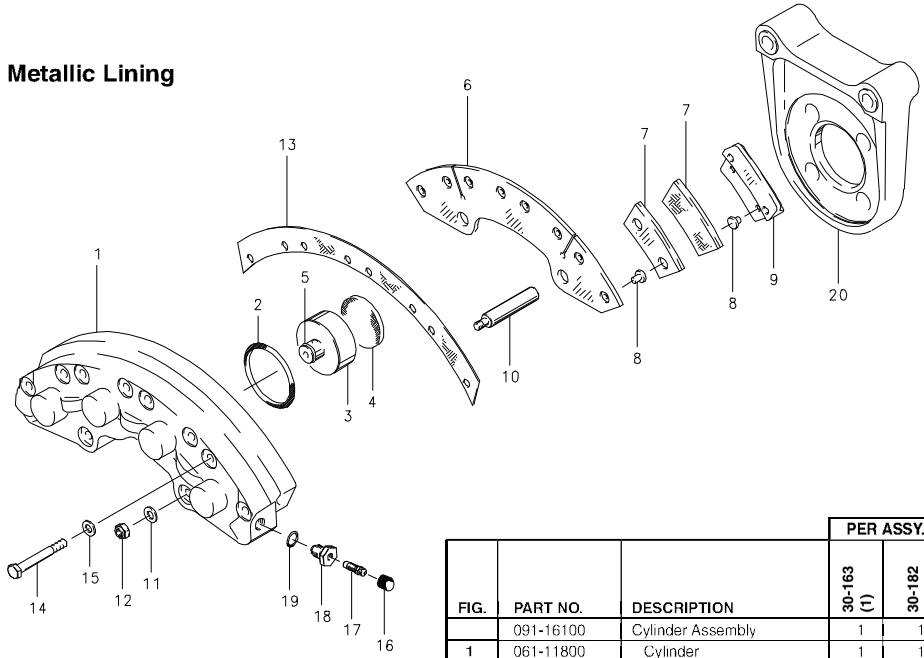

FIG.	PART NO.	DESCRIPTION	PER ASSY. 30-163 (1)	PER ASSY. 30-182
	091-16100	Cylinder Assembly	1	1
1	061-11800	Cylinder	1	1
2	101-05200	O-Ring (MS28775-224)	4	4
	092-06700	Piston Assembly	4	4
3	062-06700	Piston	4	4
4	088-00100	Insulator	4	4
5	082-02000	Friction Spring	4	4
	073-08500 (2)	Pressure Plate Assembly	1	1
6	063-02500	Pressure Plate	1	1
8	177-00300	Pin	8	8
7	066-03300	Lining	4	4
	074-06600 (3)	Back Plate Assembly	4	4
9	064-01600	Back Plate	4	4
8	177-00300	Pin	8	8
7	066-03300	Lining	4	4
10	069-01900	Anchor Bolt	2	2
11	095-10200	Washer (AN960-416L)	2	2
12	094-10300	Nut (MS21044-N4)	2	2
13	068-02800	Shim-Insulator	1	1
14	103-14300	Bolt	8	8
15	095-10400	Washer (AN960-416)	8	8
16	183-00100	Cap-Bleeder	1	1
17	079-00300	Screw-Bleeder	1	1
18	081-00500	Seat-Bleeder	1	1
19	101-50011	O-Ring (MS28775-011)	1	1
20	075-16800	Torque Plate Assembly	1	
	075-17100	Torque Plate Assembly		1
21	075-11300	Torque Plate Assembly	1	
	075-13900	Torque Plate Assembly		1

NOTES:

(1) When reordering, specify LH or RH.

(2) 073-08501 is the spares replacement for 073-08500 and includes items 6, 7, and 8.

(3) 074-06601 is the spares replacement for 074-06600 and includes items 7, 8, and 9.

30-67E

Organic Lining

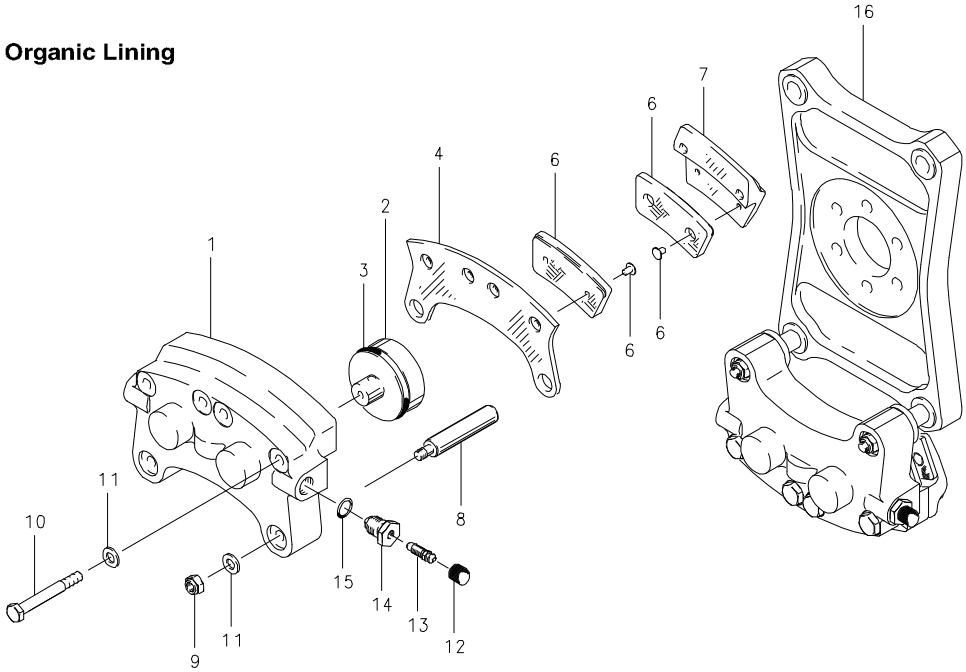

Assy. Number

A) 30-67E

FIG.	PART NUMBER	DESCRIPTION	QTY. PER ASSY. A
	091-03000	Cylinder Assy.	2
1	061-02800	Cylinder	2
	092-01600	Piston Assy.	4
2	062-01500	Piston	4
3	101-02700	O-Ring (MS28775-222)	4
	073-01500	Pressure Plate Assy.	2
4	063-01500	Pressure Plate	2
5	066-10800	Lining	4
6	105-00200	Rivet	8
	074-01300	Back Plate Assy.	4
7	064-01600	Back Plate	4
5	066-10800	Lining	4
6	105-00200	Rivet	8
8	069-00400	Anchor Bolt	4
9	094-10300	Nut (MS21044-N4)	4
10	103-11700	Bolt	8
11	095-10400	Washer (AN960-416)	12
12	183-00100	Cap-Bleeder	2
13	079-00300	Screw-Bleeder	2
14	081-00200	Seat-Bleeder	2
15	101-00700	O-Ring (MS28775-012)	2
16	075-15800	Torque Plate Assy.	1

4

30-107, 30-107A, 30-107B, 30-159, 30-159A

Metallic Lining

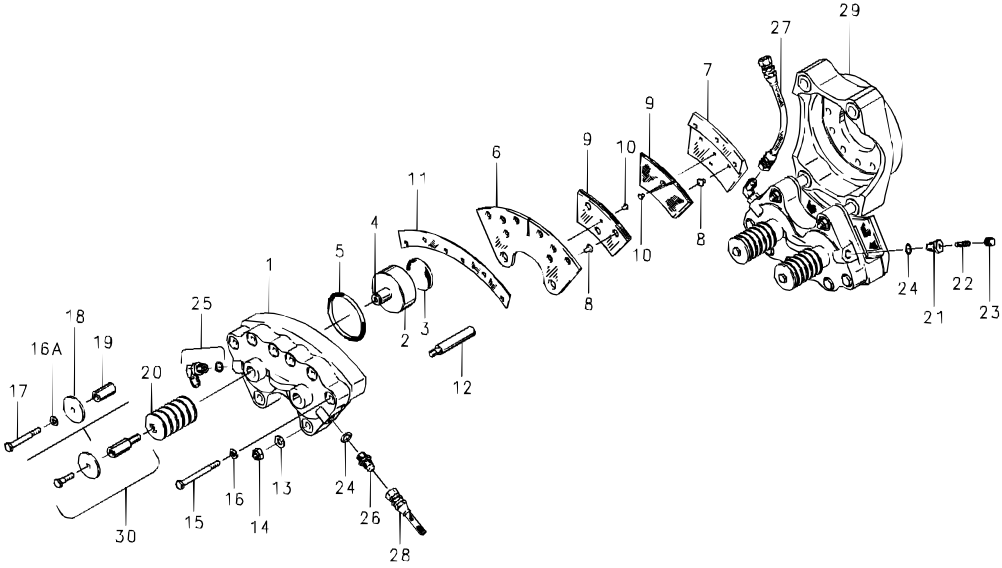

30-107, 30-107A, 30-107B, 30-159, 30-159A

Metallic Lining

FIG.	PART NUMBER	DESCRIPTION	QTY. PER ASSY. A	B	C	D	E
1	061-11400	Cylinder				2	2
_	061-09000	Cylinder	2	2	2		
	092-04500	Piston Assy.	4		4		
	092-04800	Piston Assy.		4			
2	062-04700	Piston	4	4	4		
	(9)	Piston				4	4
3	088-00100	Insulator-Piston	4	4	4	4	4
4	101-24900	O-Ring	4		4	4	
	101-25000	O-Ring		4			4
	101-24200	O-Ring	4		4		
5	101-24500	O-Ring		4			
	101-05200	O-Ring (MS28775-224				4	
_	101-21500	O-Ring					4
_	073-06200	Pressure Plate Assy.	2	2	2	2	2
6	063-03500	Pressure Plate	2	2	2	2	2
8	177-01600	Pin-Lining	12	12	12	12	12
9	066-09000	Lining	4	4	4	4	4
10	105-00200	Rivet	4	4	4	4	4
_	074-04700	Back Plate Assy.	4	4	4	4	4
7	064-03200	Back Plate	4	4	4	4	4
8	177-01600	Pin-Lining	12	12	12	12	12
9	066-09000	Lining	4	4	4	4	4
10	105-00200	Rivet	4	4	4	4	4
11	068-03300	Shim-Insulator	4	4	4	2	2
12	069-01200	Anchor Bolt	4	4	4	4	4
13	095-10500	Washer (AN960-516)	4		4	4	4
_	095-10700	Washer (AN960-516L)		4			
14	094-10400	Nut (MS21044-N5)	4	4	4	4	4
15	103-14500	Bolt	12	12	12		
	103-14200	Bolt				12	12
16	095-10200	Washer (AN960-416L)		12			
_	095-10400	Washer (AN960-416)	12	12	12	12	12
16A	095-10200	Washer (AN960-416L)	4	4			
17	103-11500	Bolt	4	4			
_	(9)	Bolt			4	4	4
18	(9)	Washer	4	4	4	4	4
19	(9)	Guide-Spring	4	4	4	4	4
20	(9)	Washer-Bellville	56	56	44	48	48
21	081-00200	Seat-Bleeder	1	1	1	1	1
22	079-00300	Screw-Bleeder	1	1	1	1	1
23	183-00100	Cap-Bleeder	1	1	1	1	1
24	101-23000	O-Ring		4			4
	101-24600	O-Ring	2		2	2	
25(6)	104-03100	Fitting	2		2		
_	104-05500	Fitting		2		2	2
26	104-04900	Fitting	1	1	1	1	1
27	207-01100	Hose Assy.-Link	1	1	1	1	1
28	207-01300	Hose Assy.-Inlet	1	1	1	1	1
29	075-13400	Torque Plate Assy.	1	1	1		
_	075-16700	Torque Plate Assy.				1	1
30(5)	(9)	Stud Assy.	4	4	4		

Assy. Number

A) 30-107 (1) (3) (12)

B) 30-107A (1) (2) (4) (12)

C) 30-107B (1) (3) (12)

D) 30-159 (1) (7) (10) (11)

E) 30-159A (1) (2) (8)

NOTES:

(1) Inactive assembly – spares support only for parts listed.

(2) Used Skydrol Fluid.

(3) 199-130 Brake Upgrade Kit converts 30-107 or 30-107B to 30-107C. TSO approved per PRM 36.

(4) 199-130A Brake Upgrade Kit converts 30-107A to 30-107D. TSO approved per PRM 38.

(5) Stud Assy. replaced by items 17, 18 and 19 after 11/83.

(6) O-ring is part of Fitting Assy. For replacement O-ring, order P/N 101-24600.

(7) 30-159 superseded by 30-159B.

(8) 30-159A superseded by 30-159C.

(9) Inactive part – no longer available for spares support.

(10) 199-94 Brake Retract Kit retrofits 30-159 brake to use new style retracts. TSO approved per PRM 49.

(11) 199-173 Brake Retract Kit same as 199-94, except does not include new cylinders and pistons.

(12) Refer to SB7098 for inspection of brake pistons.

30-107C, 30-107D, 30-107E, 30-159B, 30-159C

Metallic Lining

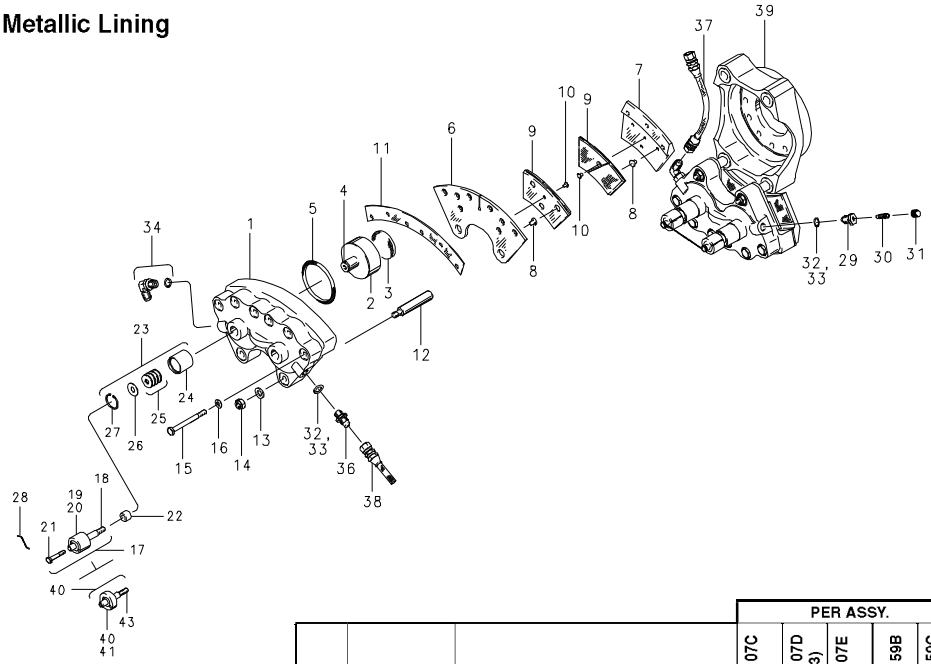

FIG.	PART NO.	DESCRIPTION	PER ASSY. 30-107C (3)	30-107D (2) (3)	30-107E (3)	30-159B	30-159C
	091-16600	Cylinder Assembly	2				
	091-17000	Cylinder Assembly		2			
	091-15102	Cylinder Assembly				2	
	091-15103	Cylinder Assembly					2
	091-22000	Cylinder Subassembly, Leading			1		
	091-22001	Cylinder Subassembly, Trailing			1		
1	061-09000	Cylinder	2	2	2		
	061-11400	Cylinder				2	2
	092-04500	Piston Assembly	4		4		
	092-04800	Piston Assembly		4			
	092-07800	Piston Assembly				4	
	092-07801	Piston Assembly					4
2	062-04700	Piston	4	4	4		
	062-08500	Piston				4	4
3	088-00100	Instulator	4	4	4	4	4
4	101-24900	O-Ring	4		4	4	
	101-25000	O-Ring		4			4
5	101-24200	O-Ring	4		4		
	101-24500	O-Ring		4			
	101-05200	O-Ring (MS28775-224)				4	
	101-21500	O-Ring					4

NOTES:

(1) O-ring is part of Fitting Assy.
For replacement O-ring, order P/N 101-24600.

(2) Uses Skydrol Fluid.

(3) Refer to SB7098 for inspection of brake pistons.

(Continued on next page)

30-107C, 30-107D, 30-107E, 30-159B, 30-159C

Metallic Lining

(Continued from previous page)

FIG.	PART NO.	DESCRIPTION	PER ASSY. 30-107C (3)	30-107D (2) (3)	30-107E (3)	30-159B	30-159C ( )
	073-06200	Pressure Plate Assembly	2	2	2	2	2
6	063-03500	Pressure Plate	2	2	2	2	2
8	177-01600	Pin-Lining	12	12	12	12	12
9	066-09000	Lining	4	4	4	4	4
10	105-00200	Rivet	4	4	4	4	4
	074-04700	Back Plate Assembly	4	4	4	4	4
7	064-03200	Back Plate	4	4	4	4	4
8	177-01600	Pin-Lining	12	12	12	12	12
9	066-09000	Lining	4	4	4	4	4
10	105-00200	Rivet	4	4	4	4	4
11	068-03300	Shim-Insulator	2	2	2	2	2
12	069-01200	Anchor Bolt	4	4	4	4	4
13	095-10500	Washer (AN960-516)	4	4	4	4	4
14	094-10400	Nut (MS21044-N5)	4	4	4	4	4
15	103-14500	Bolt	12	12	12		
	103-14200	Bolt				12	12
16	095-10400	Washer (AN960-416)	12	12	12	12	12
17	139-13100	Stud Assembly	4	4		4	4
18	139-12900	Stuc	4	4		4	4
19	139-12700	Friction Sleeve	4	4		4	4
20	139-12800	Friction Sleeve	4	4		4	4
21	103-01300	Bolt	4	4		4	4
22	067-08000	Spacer	4	4		4	4
23	139-13300	Cup Assembly	4	4	4	4	4
24	139-13400	Cup	4	4	4	4	4
25	095-03700	Disc Spring	32	32	32	32	32
26	095-03600	Washer	4	4	4	4	4
27	155-08200	Snap Ring	4	4	4	4	4
28	- - - - - - - -	Lockwire (MS20995C32)	AR	AR		AR	AR
	139-16600	Lockwire (MS20995C32)			AR		
29	081-00200	Seat-Bleeder	1	1	1	1	1
30	079-00300	Screw-Bleeder	1	1	1	1	1
31	183-00100	Cap-Bleeder	1	1	1	1	1
32	101-23000	O-Ring		4			2
33	101-24600	O-Ring	2		2	2	
34	104-03100	Fitting (1)	2		2	2	2
	104-05500	Fitting (1)		2			
36	104-04900	Fitting	1	1	1	1	1
37	207-01100	Hose Assembly Link	1	1	1	1	1
38	207-01300	Hose Assembly Inlet	1	1	1	1	1
39	075-13400	Torque Plate Assembly	1	1	1		
	075-16700	Torque Plate Assembly				1	1
40	111-11600	Retract Stud Assembly			4		
41	200-02300	Return Collar Spring			4		
42	203-00500	Friction Ring			4		
43	177-04400	Friction Pin			4		

4

30-141, 30-142

Metallic Lining

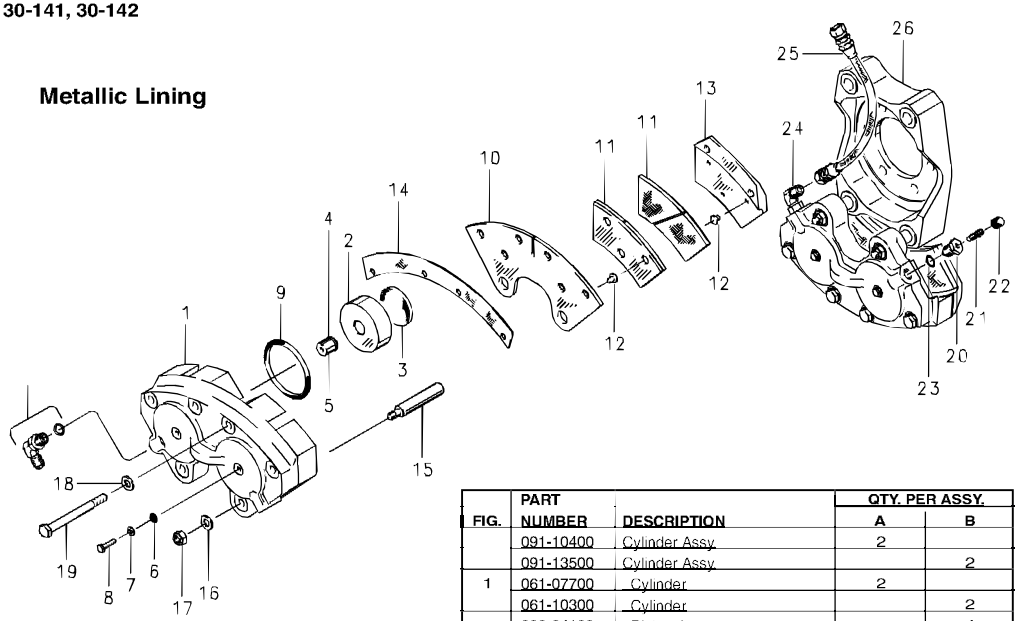

Assy. Number

A) 30-141

B) 30-142

NOTES:

(1) Illustrated assembly is 30-142.

FIG.	PART NUMBER	DESCRIPTION	QTY. PER ASSY. A	QTY. PER ASSY. B
	091-10400	Cylinder Assy.	2	
	091-13500	Cylinder Assy.		2
1	061-07700	Cylinder	2	
	061-10300	Cylinder		2
	092-04100	Piston Assy.		4
	092-05400	Piston Assy.	4	
2	062-04100	Piston		4
	062-05500	Piston	4	
3	088-00100	Insulator	4	4
4	082-02000	Friction	4	4
5	139-08100	Piston Guide	4	4
6	095-02600	Stat-O-Seal	4	4
7	095-10800	Washer (AN960-10L)	4	4
8	103-00100	Bolt (AN3-5A)	4	4
9	101-24200	O-Ring		4
	101-27300	O-Ring (MS28775-223)	4	
	073-05900	Pressure Plate Assy.	2	2
10	063-04600	Pressure Plate	2	2
11	066-07300	Lining	8	8
12	177-01600	Pin	24	24
	074-04500	Back Plate Assy.	4	4
13	064-03800	Back Plate	4	4
14	068-03900	Shim-Insulator	2	2
15	069-01200	Anchor Bolt	4	4
16	095-10700	Washer (AN960-516L)	4	4
17	094-10400	Nut (MS21044-N5)	4	4
18	095-10700	Washer (AN960-516L)	8	
	095-10500	Washer (AN960-516)		8
19	103-22500	Bolt (AN5H-22A)	8	8
20	081-00200	Bleeder Seat	1	1
21	079-00300	Bleeder Screw	1	1
22	183-00100	Bleeder Cap	1	1
23	101-00700	O-Ring (MS28775-012)	3	3
24	104-03100	Fitting	2	2
25	207-00800	Hose Assy.	1	1
26	075-13700	Torque Plate Assy.	1	1

30-144, 30-144A, 30-144B

Metallic Lining

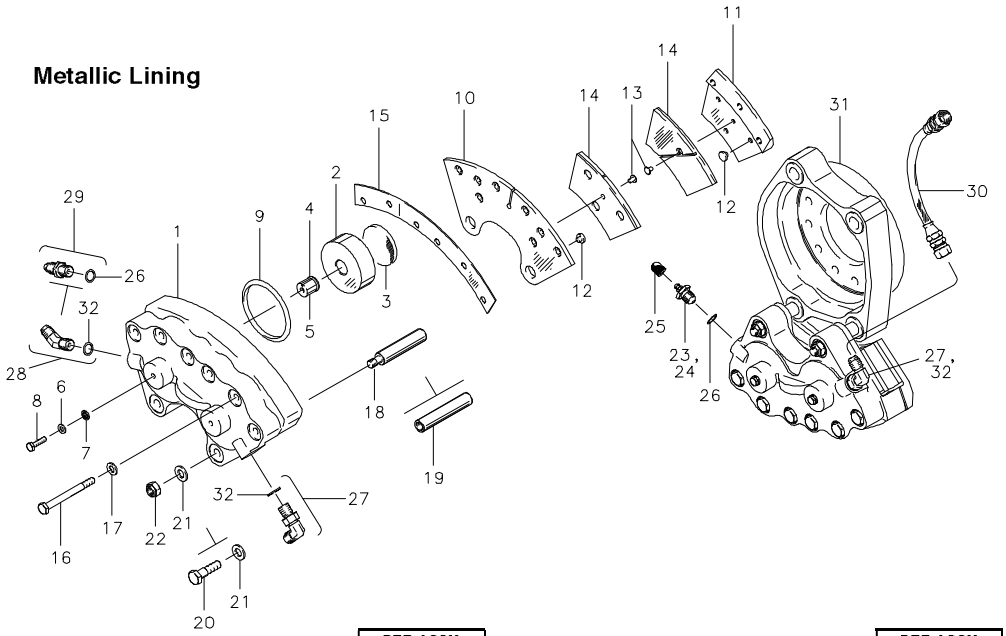

FIG.	PART NO.	DESCRIPTION	PER ASSY. 30-144	30-144A	30-144B
	091-13900	Cylinder Assembly	2		2
	091-13901	Cylinder Assembly		2	
1	061-10600	Cylinder	2	2	2
	092-07300	Piston Assembly	4		
	092-04100	Piston Assembly		4	4
2	062-04100	Piston	4	4	
3	088-00100	Insulator	4	4	4
4	082-02000	Friction Spring	4	4	4
5	139-08100	Piston Guide	4	4	4
6	095-10300	Washer (AN960-10)	4	4	4
7	095-02600	Stat-O-Seal	4	4	4
8	103-00200	Bolt (AN3-7A)	4	4	4
9	101-24200	O-Ring	4	4	4
	073-06200	Pressure Plate Assembly	2	2	2
10	063-03500	Pressure Plate	2	2	2
12	177-01600	Pin	12	12	12
13	105-00200	Rivet	4	4	4
14	066-09000	Lining	4	4	4
	074-04800	Back Plate Assembly	4	4	4
11	064-03200	Back Plate	4	4	4
12	177-01600	Pin	12	12	12
13	105-00200	Rivet	4	4	4
14	066-09000	Lining	4	4	4

FIG.	PART NO.	DESCRIPTION	PER ASSY. 30-144	30-144A	30-144B
15	068-03300	Shim-Insulator	2	4	2
16	103-14200	Bolt	12	12	12
17	095-10400	Washer (AN960-416)	12		12
	095-10200	Washer (AN960-416L)		12	
18	069-02400	Anchor Bolt	4		
	069-01200	Anchor Bolt			4
19	069-02100	Anchor Bolt		4	
20	103-20100	Bolt		4	
21	095-10500	Washer (AN960-516)	4	8	4
22	094-10400	Nut (MS21044-N5)	4		4
23	081-00200	Seat-Bleeder	1	1	1
24	079-00300	Screw-Bleeder	1	1	1
25	183-00100	Cap-Bleeder	1	1	1
26	101-24600	O-Ring	1	1	1
27	104-03100	Fitting	2	2	2
32	101-38900	O-Ring	2	2	2
28	104-04700	Fitting	1	1	
32	101-38900	O-Ring	1	1	
29	104-04900	Fitting			1
26	101-24600	O-Ring			1
30	207-00700	Hose Assembly	1	1	1
31	075-15500	Torque Plate Assembly	1	1	
	075-16900	Torque Plate Assembly			1

30-98, 30-98A, 30-98B, 30-98C, 30-98D

Organic Lining

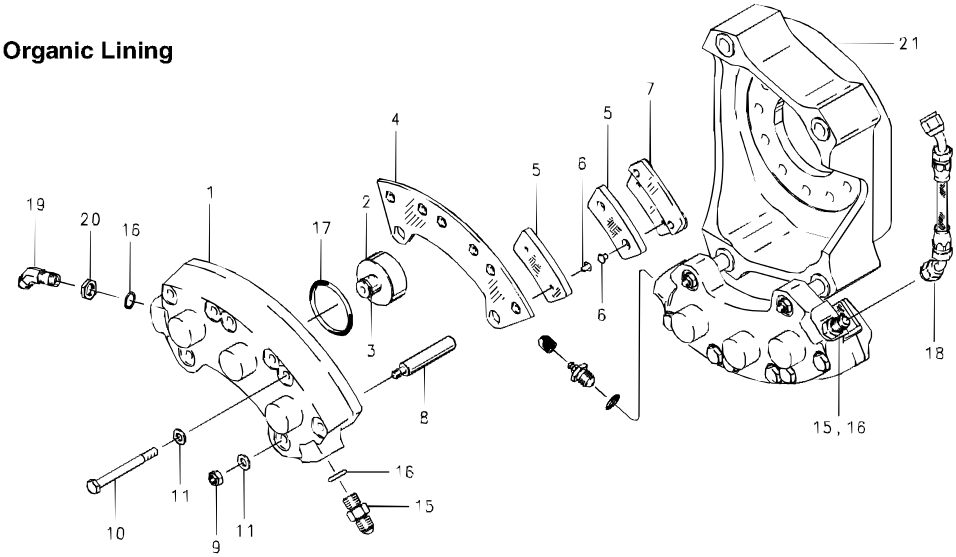

Assy. Number

A) 30-98

B) 30-98A (1)

C) 30-98B

D) 30-98C

E) 30-98D

NOTES:

(1) This brake uses automotive type brake fluid.

FIG.	PART NUMBER	DESCRIPTION	QTY. PER ASSY. A	B	C	D	E
	091-07900	Cylinder Assy.	2		2	2	
	091-07901	Cylinder Assy.		2			
	091-11000	Cylinder Assy.					2
1	061-06000	Cylinder	2	2	2	2	2
	092-03300	Piston Assy.	6	6	6	6	6
2	062-03100	Piston	6	6	6	6	6
3	082-02000	Friction Spring	6	6	6	6	6
	073-03000	Pressure Plate Assy.	2	2	2	2	2
4	063-01300	Pressure Plate	2	2	2	2	2
5	066-10800	Lining	6	6	6	6	6
6	105-00200	Rivet	12	12	12	12	12
	074-02200	Back Plate Assy.	6	6	6	6	6
7	064-01600	Back Plate	6	6	6	6	6
5	066-10800	Lining	6	6	6	6	6
6	105-00200	Rivet	12	12	12	12	12
8	069-00400	Anchor Bolt	4	4	4	4	4
9	094-10300	Nut (MS21044-N4)	4	4	4	4	4
10	103-11800	Bolt	12	12	12	12	12
11	095-10400	Washer (AN960-416)	16	16	16	16	16
12	183-00100	Cap-Bleeder	1	1	1	1	1
13	079-00300	Screw-Bleeder	1	1	1	1	1
14	081-00200	Seat-Bleeder	1	1	1	1	1
15	104-00200	Fitting (AN815-4D)	2	2	2	2	
16	101-00700	O-Ring (MS28775-012)	3		3	3	2
	101-23000	O-Ring		4			
17	101-23500	O-Ring		6			
	101-50128	O-Ring (MS28775-128)	6		6	6	6
18	207-00600	Hydraulic Line Assy.-Inlet	1	1	1	1	
19	104-02000	Fitting (AN837-4D)		1			
20	094-90500	Nut (AN924-4D)		1			
	075-11900	Torque Plate Assy.	1				1
21	075-11901	Torque Plate Assy.		1	1		
	075-11902	Torque Plate Assy.				1	

30-123, 30-138

Metallic Lining

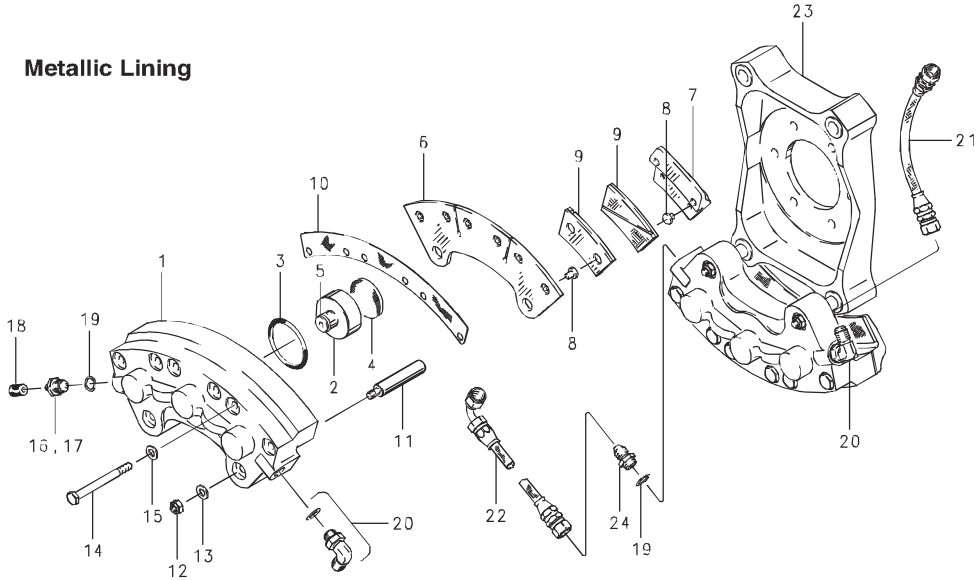

FIG.	PART NO.	DESCRIPTION	PER ASSY. 30-123	PER ASSY. 30-138
	091-10800	Cylinder Assembly	2	2
1	061-08700	Cylinder	2	2
	092-03600	Piston Assembly	6	6
2	062-03400	Piston	6	6
3	101-02700	O-Ring (MS28775-222)	6	6
4	088-00200	Insulator	6	6
5	082-02000	Friction Spring	6	6
	073-03700 (1)	Pressure Plate Assembly	2	2
6	063-03000	Pressure Plate	2	2
8	177-01600	Pin	12	12
	074-03200 (2)	Back Plate Assembly	6	6
7	064-02700	Back Plate	6	6
8	177-01600	Pin	12	12
9	066-06800	Lining	12	12
10	068-03000	Shim	2	2

FIG.	PART NO.	DESCRIPTION	PER ASSY. 30-123	PER ASSY. 30-138
11	069-00400	Anchor Bolt	4	4
12	094-10300	Nut (MS21044-N4)	4	4
13	095-10200	Washer (AN960-416L)	4	4
14	103-11800	Bolt	12	12
15	095-10400	Washer (AN960-416)	12	12
16	081-00200	Seat-Bleeder	1	1
17	079-00300	Screw-Bleeder	1	1
18	183-00100	Cap-Bleeder	1	1
19	101-00700	O-Ring (MS28775-012)	2	2
20	104-03100	Fitting	2	2
24	104-00200	Fitting (AN815-4D)	1	1
21	207-00800	Hose Assembly	1	1
22	207-01400	Hose Assembly, Inlet	1	
23	075-14100	Torque Plate Assembly	1	
	075-15100	Torque Plate Assembly		1

NOTES:

(1) 073-03701 is the spares replacement for 073-03700 and includes items 6, 8, and 9.

(2) 074-03202 is the spares replacement for 074-03200 and includes items 7, 8, and 9.

30-149, 30-231

Metallic Lining

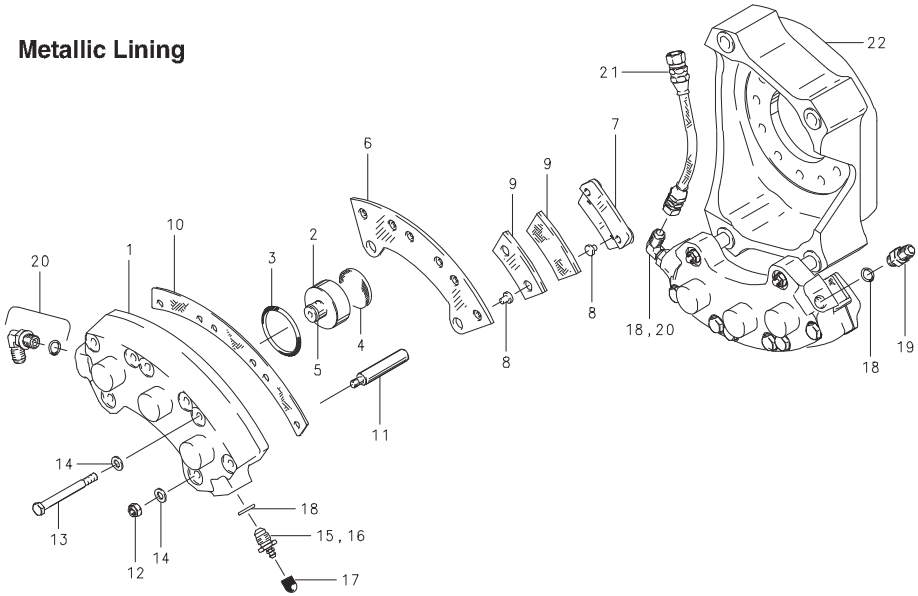

FIG.	PART NO.	DESCRIPTION	PER ASSY. 30-149	PER ASSY. 30-231
	091-14100	Cylinder Assembly	2	
	091-21000	Cylinder Assembly		2
1	061-06000	Cylinder	2	
	061-15900	Cylinder		2
	092-05500	Piston Assembly	6	
	092-05501	Piston Assembly		6
2	062-05700	Piston	6	6
3	101-50128	O-Ring (MS28775-128)	6	6
4	088-00200	Insulator	6	6
5	082-02000	Friction Spring	6	
	073-06600 (1)	Pressure Plate Assembly	2	2
6	063-00700	Pressure Plate	2	2
8	177-01600	Pin	12	12
	074-03400 (2)	Back Plate Assembly	6	6
7	064-02700	Back Plate	6	6
8	177-01600	Pin	12	12
9	066-06600	Lining	12	12

FIG.	PART NO.	DESCRIPTION	PER ASSY. 30-123	PER ASSY. 30-138
10	068-01600	Shim	2	2
11	069-00400	Anchor Bolt	4	
	069-02800	Anchor Bolt		4
12	094-10300	Nut (MS21044-N4)	4	4
13	103-11800	Bolt	12	
	103-14300	Bolt		12
14	095-10400	Washer (AN960-416)	16	16
15	081-00200	Seat-Bleeder	1	1
16	079-00300	Screw-Bleeder	1	1
17	183-00100	Cap-Bleeder	1	1
18	101-00700	O-Ring (MS28775-012)	4	3
19	104-00200	Fitting (AN815-4D)	1	1
20	104-03100	Fitting	2	
21	207-01300	Hose Assembly	1	
	207-00600	Hose Assembly		1
22	075-16000	Torque Plate Assembly	1	
	075-11903	Torque Plate Assembly		1

NOTES:

(1) 073-06601 is the spares replacement for 073-06600 and includes items 6, 8, and 9.

(2) 074-03401 is the spares replacement for 074-03400 and includes items 7, 8, and 9.

30-106, 30-158

Metallic Lining

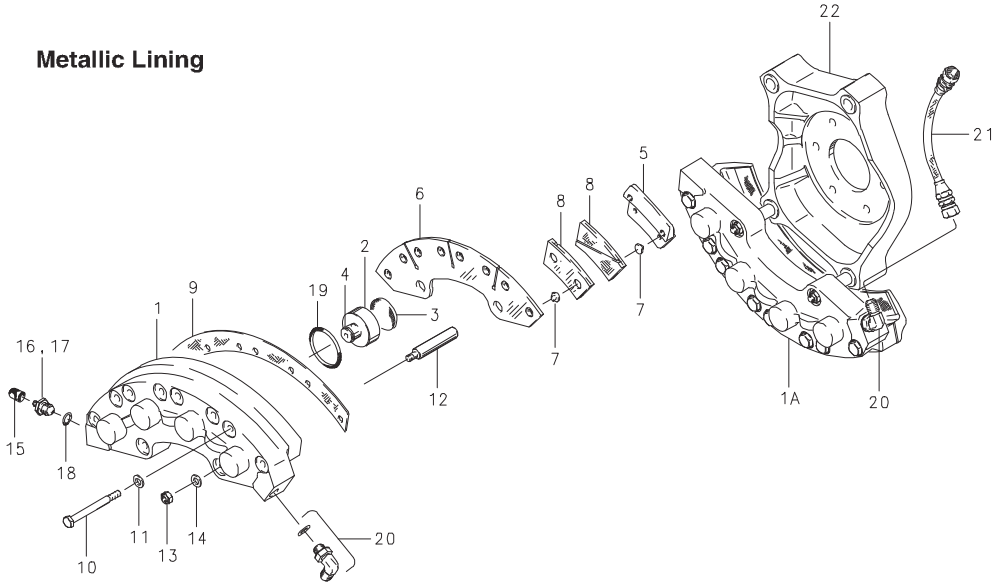

FIG.	PART NO.	DESCRIPTION	PER ASSY. 30-106	PER ASSY. 30-158
1	091-09400 (1)	Cylinder Assembly	1	1
	061-07000 (1)	Cylinder	1	1
1A	091-09401 (2)	Cylinder Assembly	1	1
	061-07001 (2)	Cylinder	1	1
	092-03900	Piston Assembly	8	8
2	062-03800	Piston	8	8
3	088-00400	Insulator	8	8
4	082-02000	Friction Spring	8	8
	074-03400 (4)	Back Plate Assembly	8	8
5	064-02700	Back Plate	8	8
7	177-01600	Pin	8	8
	073-04300 (3)	Pressure Plate Assembly	2	2
6	063-03100	Pressure Plate	2	2
7	177-01600	Pin	8	8
8	066-06800	Lining	16	16

FIG.	PART NO.	DESCRIPTION	PER ASSY. 30-123	PER ASSY. 30-138
9	068-03100	Shim-Insulator	2	2
10	104-14400	Bolt (AN4H23A)	16	16
11	095-10400	Washer (AN960-416)	16	16
12	069-00400	Anchor Bolt	4	4
13	094-10300	Nut (MS21044-N4)	4	4
14	095-10200	Washer (AN960-416L)	4	4
15	183-00100	Cap-Bleeder	1	1
16	079-00300	Screw-Bleeder	1	1
17	081-00200	Seat-Bleeder	1	1
18	101-00700	O-Ring (MS28775-012)	1	1
19	101-02500	O-Ring (MS28775-220)	8	8
20	104-03100	Fitting	2	2
21	207-00800	Hose Assembly	1	1
22	075-12800	Torque Plate Assembly	1	
	075-16600	Torque Plate Assembly		1

NOTES:

(1) 091-09400 Cylinder Assembly leads on LH Gear, trails on RH Gear.

(2) 091-09401 Cylinder Assembly trails on LH Gear, leads on RH Gear.

(3) 073-04301 is the spares replacement for 073-04300 and includes items 6, 7, and 8.

(4) 074-03402 is the spares replacement for 074-03400 and includes items 5, 7, and 8.

30-170

Metallic Lining

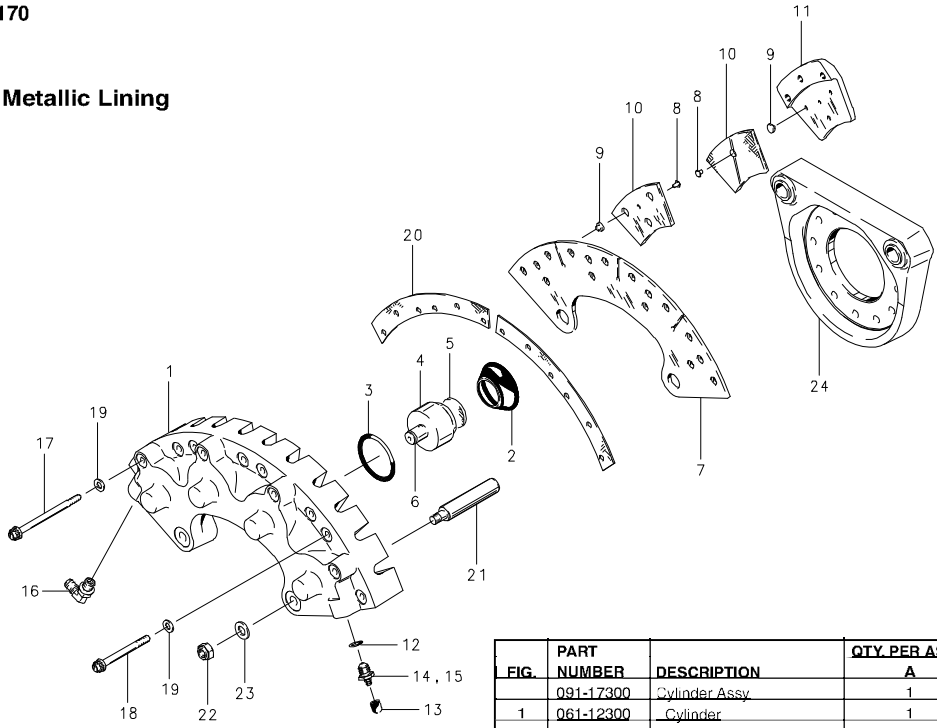

Assy. Number

A) 30-170

FIG.	PART NUMBER	DESCRIPTION	QTY. PER ASSY. A
	091-17300	Cylinder Assy.	1
1	061-12300	Cylinder	1
2	139-20000	Boot-Piston	4
3	101-05200	O-Ring (MS28775-224)	4
	092-06900	Piston Assy.	4
4	062-06800	Piston	4
5	088-01400	Insulator	4
6	082-02000	Friction Spring	4
	073-07400	Pressure Plate Assy.	1
7	063-05800	Pressure Plate	1
8	105-00200	Rivet	4
9	177-01600	Pin	12
10	066-10000	Lining	4
	074-06000	Back Plate Assy.	4
11	064-03200	Back Plate	4
8	105-00200	Rivet	4
9	177-01600	Pin	12
10	066-10000	Lining	4
12	101-00700	O-Ring (MS28775-012)	1
13	183-00100	Bleeder Cap	1
14	079-00300	Bleeder Screw	1
15	081-00200	Bleeder Seat	1
16	104-03100	Fitting	1
17	103-16700	Bolt (MS21250H04036)	4
18	103-16800	Bolt (MS21250H04024)	8
19	095-14300	Washer (MS20002-C4)	12
20	068-04600	Shim-Backplate	2
21	069-02300	Anchor Bolt	2
22	094-10100	Nut (MS21042-6)	2
23	095-10600	Washer (AN960-616)	2
24	075-17000	Torque Plate Assy.	1

30-210, 30-210A

Organic Lining

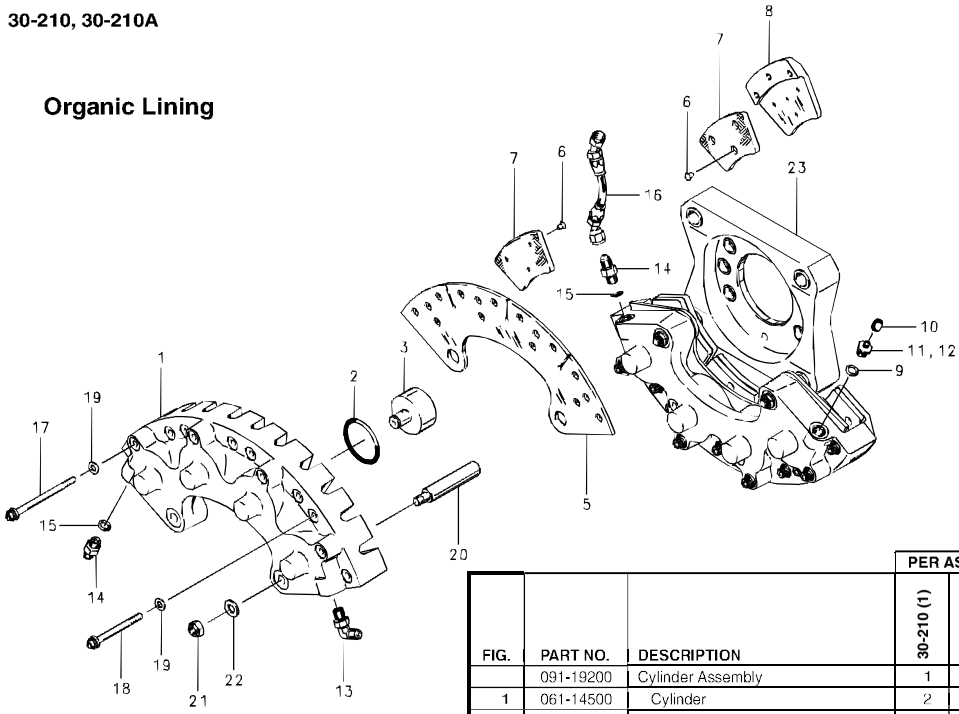

FIG.	PART NO.	DESCRIPTION	PER ASSY. 30-210 (1)	PER ASSY. 30-210A
	091-19200	Cylinder Assembly	1	
1	061-14500	Cylinder	2	2
2	101-05200	O-Ring (MS28775-224)	8	8
3	062-09301	Piston	8	8
	073-09201	Pressure Plate Assembly	2	2
5	063-05801	Pressure Plate	2	2
6	105-06700	Rivet	24	24
7	066-13100	Lining	8	8
	074-07200	Back Plate Assembly	8	8
8	064-03200	Back Plate	8	8
6	105-06700	Rivet	24	24
7	066-13100	Lining	8	8
9	101-00700	O-Ring (MS28775-012)	1	1
10	183-00100	Bleeder Cap	1	1
11	079-00300	Bleeder Screw	1	1
12	081-00200	Bleeder Seat	1	1
13	104-03100	Fitting	1	1
14	104-04900	Fitting	2	2
15	101-24600	O-Ring	2	2
16	207-01600	Hose Assembly	1	1
17	103-16700	Bolt (MS21250H04036)	8	8
18	103-16800	Bolt (MS21250H04024)	16	16
19	095-14300	Washer (MS20002-C4)	24	24
20	069-02300	Anchor Bolt	4	
	069-02301	Anchor Bolt		4
21	094-12900	Nut (MS21042-6)	4	4
22	095-10600	Washer (AN960-616)	4	4
23	075-18500	Torque Plate Assembly	1	1

NOTES:

(1) SB7067-1 Service Bulletin Kit upgrades brake to 30-210A configuration per SB7067.

30-208, 30-208A

Metallic Lining

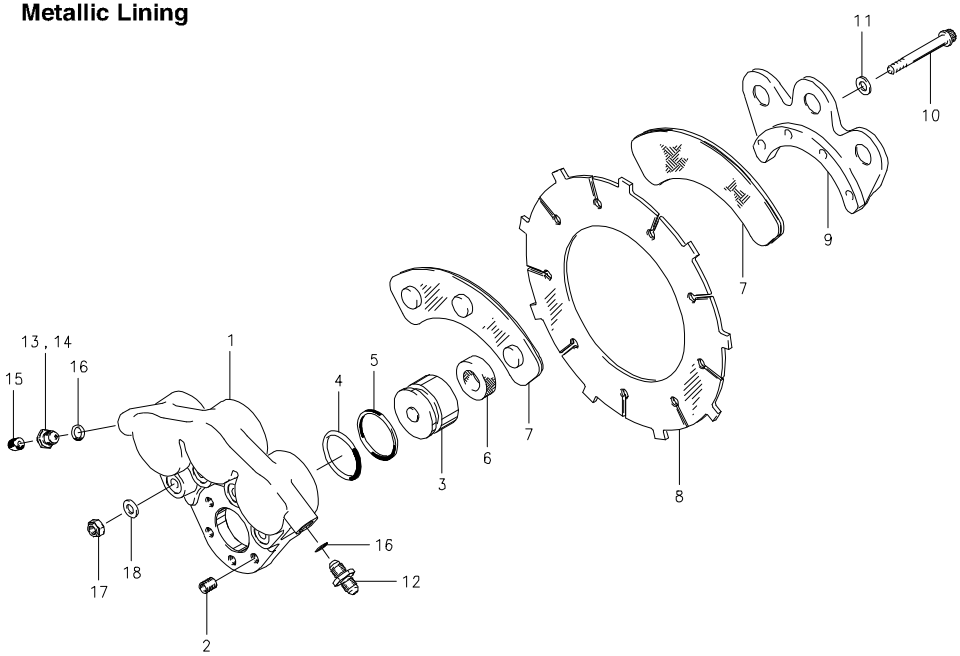

Assy. Number

A) 30-208 (1) (2)

B) 30-208A

NOTES:

(1) Inactive assembly – spares support only for parts listed.

(2) Superseded by 30-208A per SB7039.

(3) Inactive part – no longer available for spares support.

FIG.	PART NUMBER	DESCRIPTION	QTY. PER ASSY. A	QTY. PER ASSY. B
1	061-14300	Cylinder	1	1
2	230-03700	Insert	6	6
3	062-09100	Piston	3	3
4	101-34500	O-Ring	3	3
5	100-14300	Backup Ring	3	3
6	(3)	Insulator	3	
	088-01201	Insulator		3
7	(3)	Lining	2	
	066-12901	Lining		2
8	(3)	Brake Disc	1	
	159-06201	Brake Disc		1
9	064-05901	Back Plate	1	1
10	103-25100	Bolt (MS21250-05034)	4	4
11	095-02800	Washer (MS20002C5)	4	4
12	104-00200	Fitting (AN815-4D)	1	1
13	081-00200	Bleeder Seat	1	1
14	079-00300	Bleeder Screw	1	1
15	183-00100	Bleeder Cap	1	1
16	101-00700	O-Ring (MS28775-012)	2	2
17	094-10402	Nut (MS21045-5E)	4	4
18	095-10500	Washer (AN960-516)	4	4

30-165 LH, 30-165 RH

Metallic Lining

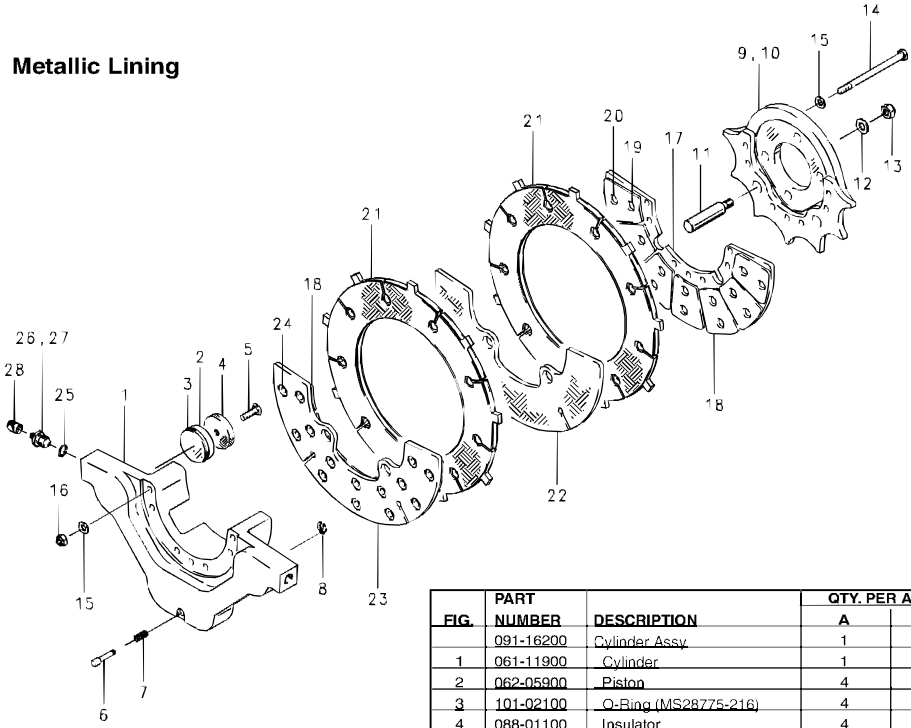

Assy. Number

A) 30-165 LH (1) (2)

B) 30-165 RH (1) (2)

NOTES:

(1) Used with 40-205 Wheel Assemblies.

(2) This Brake is not FAA TSO approved – order from airframe manufacturer only.

FIG.	PART NUMBER	DESCRIPTION	QTY. PER ASSY. A	QTY. PER ASSY. B
	091-16200	Cylinder Assy.	1	1
1	061-11900	Cylinder	1	1
2	062-05900	Piston	4	4
3	101-02100	O-Ring (MS28775-216)	4	4
4	088-01100	Insulator	4	4
5	102-15900	Screw (AN510-416-6)	4	4
6	139-12300	Lining Indicator Pin	1	1
7	082-06700	Spring	1	1
8	155-08000	Retaining Ring	1	1
9	065-15700	Torque Plate	1	
10	065-15750	Torque Plate		1
11	069-02200	Anchor Bolt	2	2
12	095-10500	Washer (AN960-524C)	2	2
13	094-10401	Nut (MS21045-5S)	2	2
14	103-15400	Bolt (AN4-27A)	7	7
15	095-10400	Washer (AN960-416)	14	14
16	094-10301	Nut (AN365-428C)	7	7
	074-05800	Back Plate Assy.	1	1
17	064-04600	Back Plate	1	1
18	109-00100	Wear Pad	7	7
19	105-01400	Rivet	7	7
20	105-01500	Rivet	7	7
21	159-01400	Disc	2	2
22	232-00600	Stator	1	1
	073-07300	Pressure Plate Assy.	1	1
23	063-05700	Pressure Plate	1	1
18	109-00100	Wear Pad	7	7
24	105-01100	Rivet	14	14
25	101-00700	O-Ring (MS28775-012)	1	1
26	081-00200	Bleeder Seat	1	1
27	079-00300	Bleeder Screw	1	1
28	183-00100	Bleeder Cap	1	1

30-154A, 30-154B

Metallic Lining

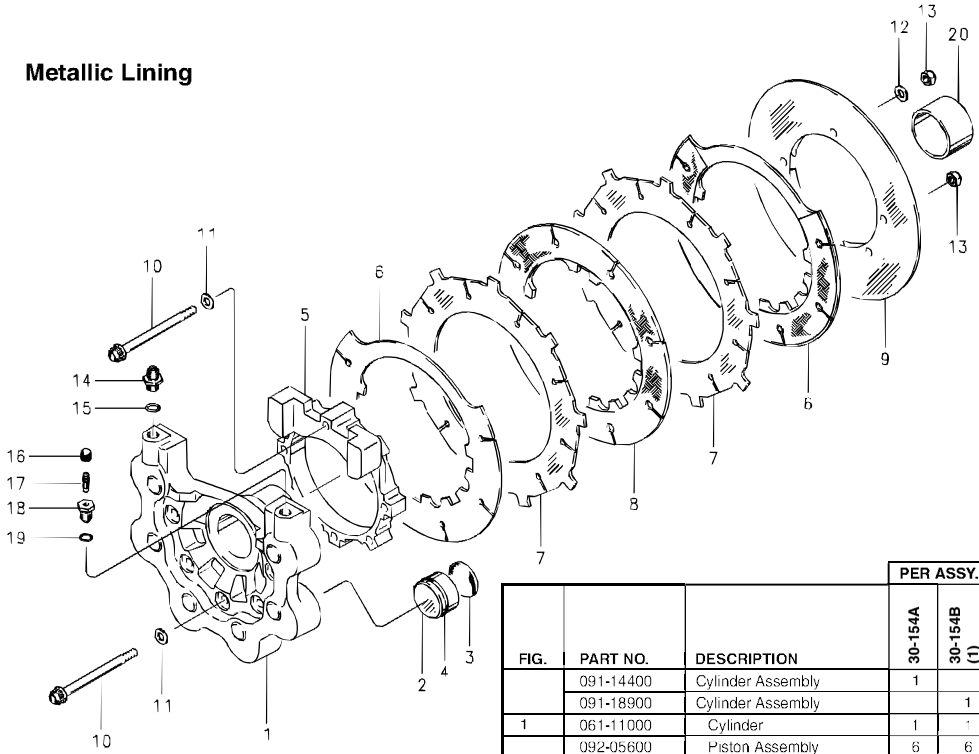

FIG.	PART NO.	DESCRIPTION	PER ASSY. 30-154A	PER ASSY. 30-154B (1)
	091-14400	Cylinder Assembly	1	
	091-18900	Cylinder Assembly		1
1	061-11000	Cylinder	1	1
	092-05600	Piston Assembly	6	6
2	062-05800	Piston	6	6
3	088-00200	Insulator	6	6
4	101-02300	O-Ring (MS28775-218)	6	6
5	065-14700	Torque Plate	1	1
6	063-05000	Pressure Plate	2	
	063-05001 (1)	Pressure Plate		2
7	159-01000	Disc	2	
	159-01001 (1)	Disc		2
8	232-00100	Center Stator	1	
	232-00101 (1)	Center Stator		1
9	074-05600	Back Plate	1	1
10	094-10300	Bolt (MS21250-05022)	6	6
11	095-02800	Washer (MS20002-C5)	6	6
12	095-13600	Washer (MS20002-5)	1	1
13	094-13100	Nut (MS21042-L5)	6	6
14	104-00200	Fitting (AN815-4D)	1	1
15	101-24600	O-Ring	1	1
16	183-00100	Cap-Bleeder	1	1
17	079-00300	Screw-Bleeder	1	1
18	081-00200	Seat-Bleeder	1	1
19	101-00700	O-Ring (AN6227-7)	1	1
20	067-06400	Spacer	1	1

NOTES:

(1) 199-187 Brake Friction Stack Kit provides the components for the replacement of wearable friction stack components.

30-191

Metallic Lining

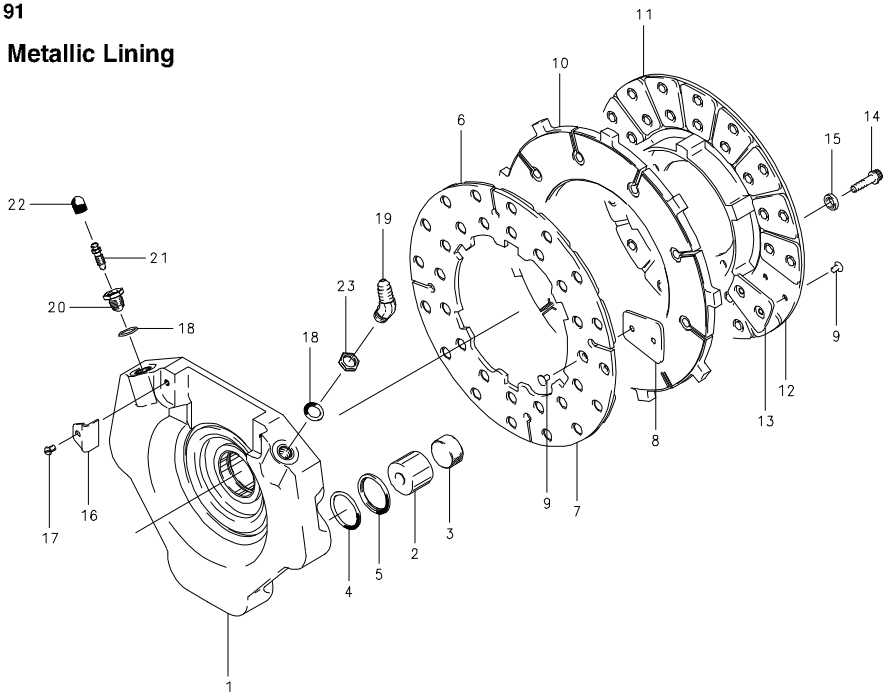

FIG.	PART NO.	DESCRIPTION	PER ASSY. 30-191
1	091-17900	Cylinder Assy.	1
	091-23700	Cylinder Assy.	
2	062-08300	Piston	6
3	088-01800	Insulator	6
4	101-50122	O-Ring (MS28775-122)	6
5	107-03100	Wiper Ring	6
6	073-08300	Pressure Plate Assy.	1
	073-11800	Pressure Plate Assy.	
7	063-06400	Pressure Plate	1
8	109-01500	Wear Pad	16
	109-03800	Wear Pad	
9	105-00900	Rivet (MS16535-360)	32
	105-00901	Rivet (NASM16535-429)	
10	159-02700	Disc	1
	159-00800	Disc	
11	074-06400	Back Plate Assy.	1
	074-08100	Back Plate Assy.	
12	064-05101	Back Plate	1
13	109-01500	Wear Pad	16
	109-03800	Wear Pad	
9	105-00900	Rivet (MS16535-360)	32
	105-00901	Rivet (NASM16535-429)	

FIG.	PART NO.	DESCRIPTION	PER ASSY. 30-191
14	103-16900	Bolt (MS21250-04004	10
15	095-14600	Washer (MS14155-4)	10
16	205-03000	Torque Liner	2
17	102-07100	Screw (AN501A10)	2
18	101-20800	O-Ring (MS28778-4)	2
19	104-02000	Elbow (AN837-4D)	1
20	081-00200	Bleeder Seat	1
21	079-00300	Bleeder Screw	1
22	183-00100	Bleeder Cap	1
23	094-90500	Nut (AN924-4D)	1

30-162

Metallic Lining

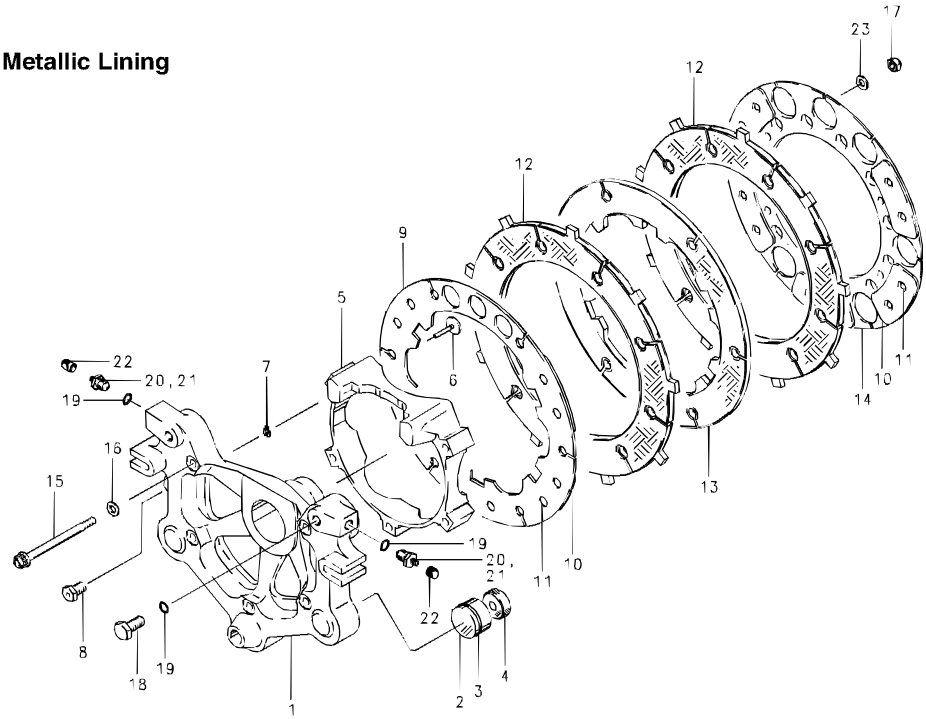

FIG.	PART NO.	DESCRIPTION	PER ASSY. 30-162
1	091-23900	Cylinder Assembly	1
2	062-07400	Piston	5
3	101-02100	O-Ring (MS28775-216)	5
4	088-01500	Insulator	5
5	065-15401	Torque Ring	1
6	139-11500	Lining Indicator Pin	1
7	155-04800	Retaining Ring	1
8	139-11400	Lining Indicator Seat	1
	073-07100	Pressure Plate Assembly	1
9	063-05500	Pressure Plate	1
10	109-00200	Wear Pad	5
11	105-00901	Rivet (NASM16535-429)	10
12	159-01200	Disc	2
13	232-00300	Stator	1

FIG.	PART NO.	DESCRIPTION	PER ASSY. 30-162
	074-05500	Back Plate Assembly	1
14	064-04300	Back Plate	1
10	109-00200	Wear Pad	5
11	105-00901	Rivet (NASM16535-429)	10
15	103-24400	Bolt (MS21250-05-040)	5
16	095-02800	Washer (MS20002C5)	5
17	094-10401	Nut (MS21045-5S)	5
18	104-05000	Plug (AN814-4)	1
19	101-00700	O-Ring (MS28775-012	3
20	081-00200	Bleeder Seat	2
21	079-00300	Bleeder Screw	2
22	183-00100	Bleeder Cap	2
23	095-10500	Washer (AN960-516)	5

30-204, 30-204A

Metallic Lining

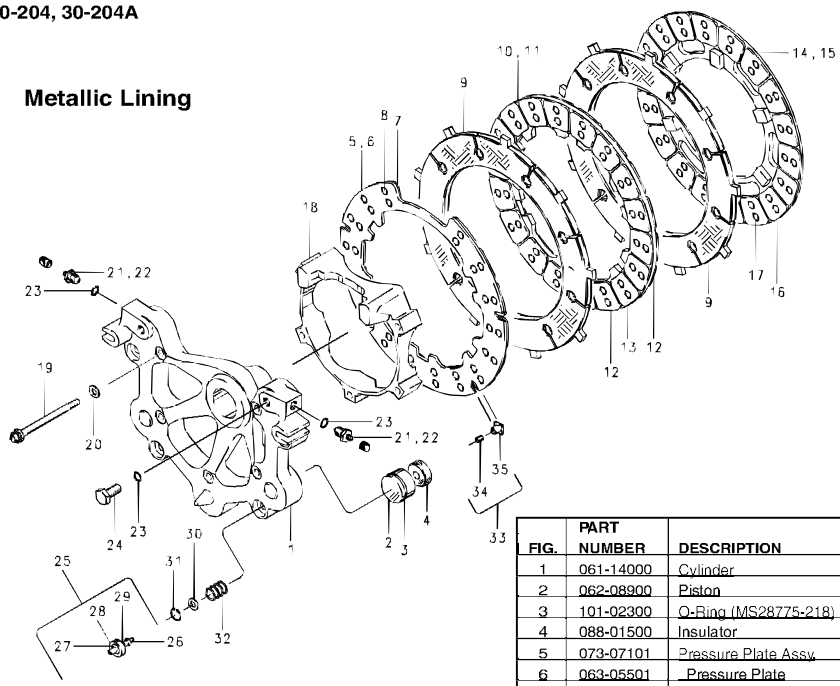

Assy. Number

A) 30-204 (1) (3)

B) 30-204A

NOTES:

(1) Inactive assembly – spares support only for parts listed.

(2) Inactive part – no longer available for spares support.

(3) Refer to Service Bulletin SB7041 for upgrade to 30-204A.

FIG.	PART NUMBER	DESCRIPTION	QTY. PER ASSY. A	QTY. PER ASSY. B
1	061-14000	Cylinder	1	1
2	062-08900	Piston	5	5
3	101-02300	O-Ring (MS28775-218)	5	5
4	088-01500	Insulator	5	5
5	073-07101	Pressure Plate Assy.	1	1
6	063-05501	Pressure Plate	1	1
7	109-00201	Wear Pad	16	16
8	105-06700	Rivet	32	32
9	(2)	Disc	2	
	159-05900	Disc		2
10	242-01200	Stator Assy.	1	1
11	232-01201	Stator	1	1
12	109-00201	Wear Pad	36	36
13	105-06800	Rivet	36	36
14	074-07000	Back Plate Assy.	1	1
15	064-04303	Back Plate	1	1
16	109-00201	Wear Pad	18	18
17	105-06700	Rivet	36	36
18	065-15401	Torque Ring	1	1
19	103-25100	Bolt (MS21250-0503)	5	5
20	095-02800	Washer (MS20002C5)	5	5
21	081-00200	Bleeder Seat	2	2
22	079-00300	Bleeder Screw	2	2
23	101-00700	O-Ring (MS28775-012)	3	3
24	104-05000	Plug (AN814-4)	1	1
25	111-10300	Adjuster Assy.	4	4
26	139-21500	Stud	4	4
27	139-12000	Friction Sleeve	4	4
28	139-11900	Sleeve Retainer	4	4
29	067-13200	Spacer	4	4
30	095-13600	Washer (MS20002-5)	4	4
31	155-07800	Snap Ring	4	4
32	082-10400	Spring	4	4
33	111-08301	Retract Base Assy.	4	4
34	230-03300	Insert	4	4
35	139-22101	Retract Base	4	4

30-150

Metallic Lining

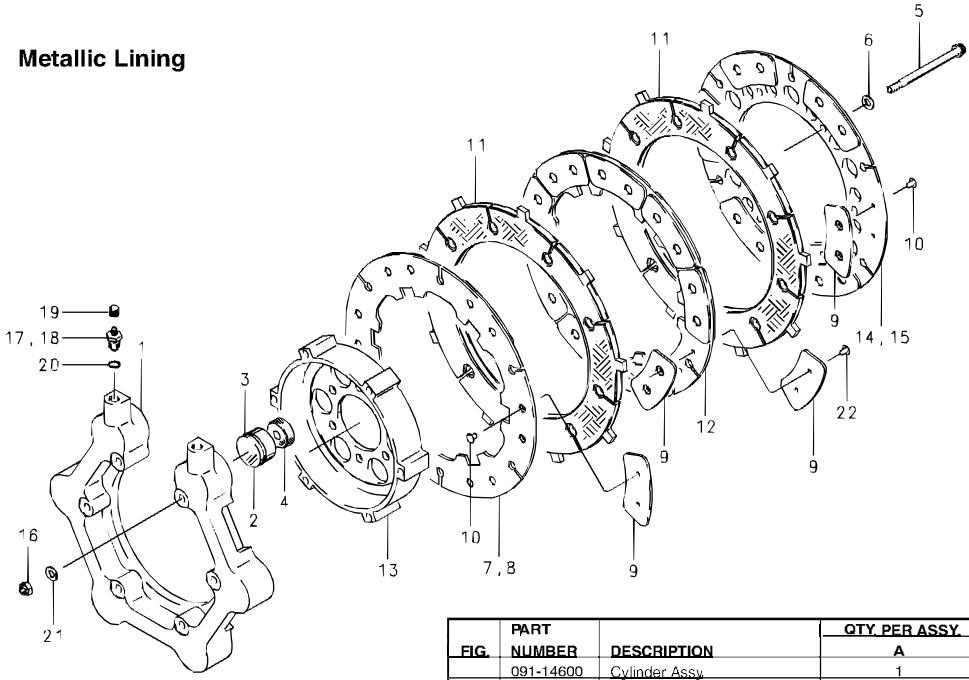

Assy. Number

A) 30-150

NOTE:

(1) Indicated assemblies have lining permanently bonded.

FIG.	PART NUMBER	DESCRIPTION	QTY. PER ASSY. A
	091-14600	Cylinder Assy.	1
1	061-11100	Cylinder	1
2	062-07100	Piston	6
3	101-02100	O-Ring (MS28775-216)	6
4	088-01500	Insulator	6
5	103-22900	Bolt (MS21250-05042)	6
6	095-02800	Washer (MS20002C5)	6
7	073-06500	Pressure Plate Assy.	1
8	063-05200	Pressure Plate	1
9	109-00200	Wear Pad	6
10	105-00900	Rivet (MS16535-360)	12
11	159-01100	Disc Assy (1)	2
	242-00300	Stator Assy.	1
12	232-01200	Stator	1
9	109-00200	Wear Pad	18
22	105-02400	Rivet (MS16535-364)	18
13	065-14800	Torque Plate	1
14	074-05000	Back Plate Assy.	1
15	064-04200	Back Plate	1
9	109-00200	Wear Pad	6
10	105-00900	Rivet (MS16535-360)	12
16	094-12700	Nut-Lock (MS21042-5)	6
17	081-00200	Bleeder-Seat	1
18	079-00300	Bleeder-Screw	1
19	183-00100	Bleeder-Cap	1
20	101-00700	O-Ring (MS28775-012)	1
21	095-10700	Washer (AN960-516L)	6

This page intentionally left blank

30-189, 30-189A, 030-18902, 30-161, 30-161A

Metallic Lining

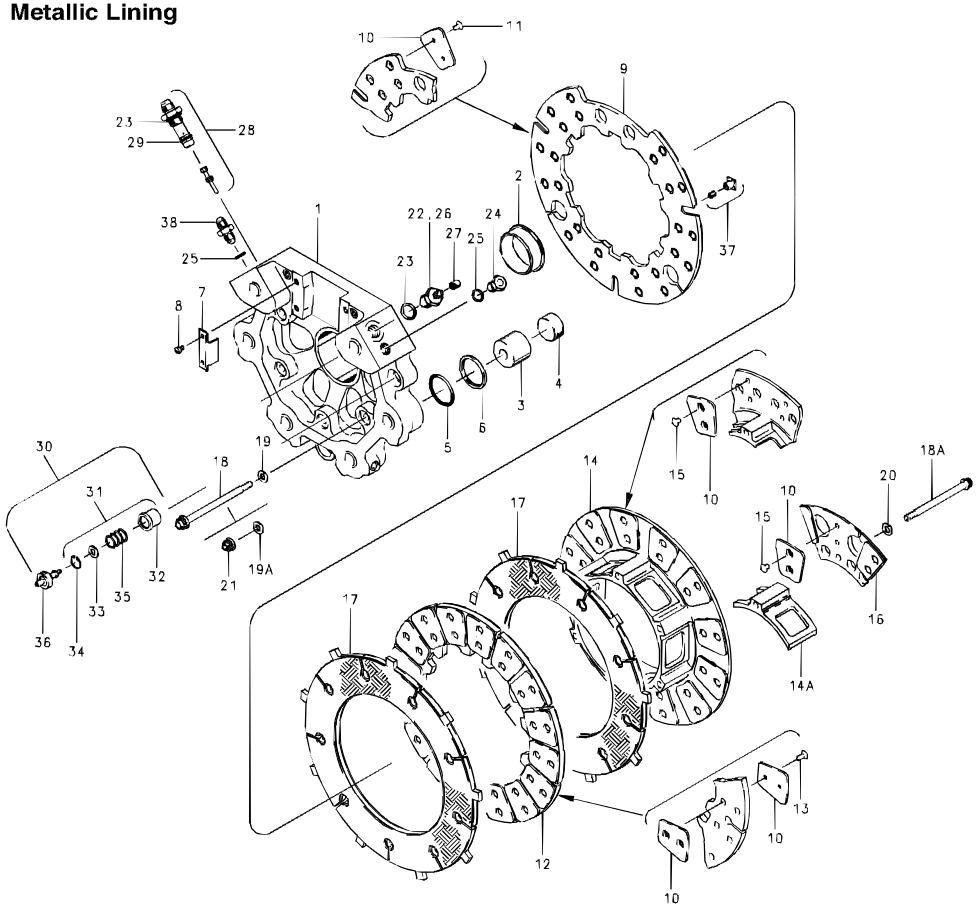

30-189, 30-189A, 030-18902, 30-161, 30-161A

FIG.	PART NO.	DESCRIPTION	PER ASSY. 30-189 (1) (2) (6)	30-189A	030-18902	30-161 (1) (3) (5) (6)	30-161A
1	091-17800	Cylinder Assembly	1	1	1		
	091-15600	Cylinder Assembly				1	1
2	145-10200	Bushing	1	1	1		
	145-08500	Bushing				1	1
3	062-06300	Piston	6	6	6	6	6
4	088-01900	Insulator	6	6	6		6
	(4)	Insulator				6	
5	101-27900	O-Ring (NAS1611-220)	6	6	6	6	6
6	107-00500	Wiper Ring	6	6	6	6	6
7	205-00900	Torque Liners	2	2	2	2	2
8	102-07100	Screw (AN501A10-6)	4	4	4	4	4
9	073-08200	Pressure Plate Assembly	1	1	1	1	1
10	109-00100	Wear Pac	12	12	12	12	12
11	105-01100	Rivet	24	24	24	24	24
12	242-00700	Center Stator Assembly	1	1	1	1	1
10	109-00100	Wear Pac	32	32	32	32	32
13	105-01200	Rivet	32	32	32	32	32
14	075-17600	Torque Plate Assembly		1	1		1
14A	(4)	Torque Plate Assembly	1			1	
10	109-00100	Wear Pac	12	12	12	12	12
15	105-01300	Rivet	24	24	24	24	24
16	(4)	Back Plate Assembly	1			1	
10	109-00100	Wear Pac	12			12	
15	105-01300	Rivet	24			24	
17	159-03500	Disc		2	2		2
	(4)	Disc	2			2	
18	103-85300	Bolt (MS21250H05022)		5	5		5
18A	(4)	Bolt	5			5	
19	095-02800	Washer (Countersunk) (MS20002C5)		5	5		5
19A	(4)	Washer (Countersunk)	5			5	
20	(4)	Washer	5			5	
21	(4)	Nut	5			5	
22	081-00600	Bleeder Seat	1	1	1	1	1
23	101-28000	O-Ring	1	1	1	1	1
24	104-05400	Plug (AN814-4K)	1	1	1	1	1
25	101-28200	O-Ring (NAS1612-4A)	2	2	2	2	2
26	079-00300	Bleeder Screw	1	1	1	1	1
27	183-00100	Bleeder Cap	1	1	1	1	1
28	111-09801	Shuttle Valve Assembly		1	1		1
	(4)	Shuttle Valve Assembly	1			1	
29	101-28100	O-Ring (NAS1611-13)	1	1	1	1	1
23	101-28000	O-Ring	1	1	1	1	1
30	111-07900	Retract Assembly	3	3	3	3	3
31	111-08400	Retract Housing Assembly	3	3	3	3	3
32	071-00200	Retract Housing	3	3	3	3	3
33	095-13600	Washer (MS20002-5)	3	3	3	3	3
34	155-07800	Snap Ring	3	3	3	3	3
35	082-10400	Spring	3	3	3	3	3
36	111-08200	Adjuster Assembly	3	3	3	3	3
37	111-08300	Retract Base Assembly	3	3	3	3	3
38	104-05200	Fitting (AN815-4K)	1	1	1	1	1

Metallic Lining

NOTES:

(1) Inactive Assembly - spares support only for parts listed.

(2) 30-189 has been superseded by 30-189A

(3) 30-161 has been superseded by 30-161A

(4) Inactive Part - no longer available for spares support.

(5) 199-165 Brake Retract Kit retrofits brake to use improved retracts.

(6) 199-169 Brake Upgrade Kit converts 30-161 brake to 30-161A and 30-189 to 39-189A. TSO approved per ESB7018 & ESB7022.

(7) 199-206 Brake Bolt Kit retrofits brake assembly to use safety wired bolts. TSO approved per ESB7028.

30-31

Organic Lining

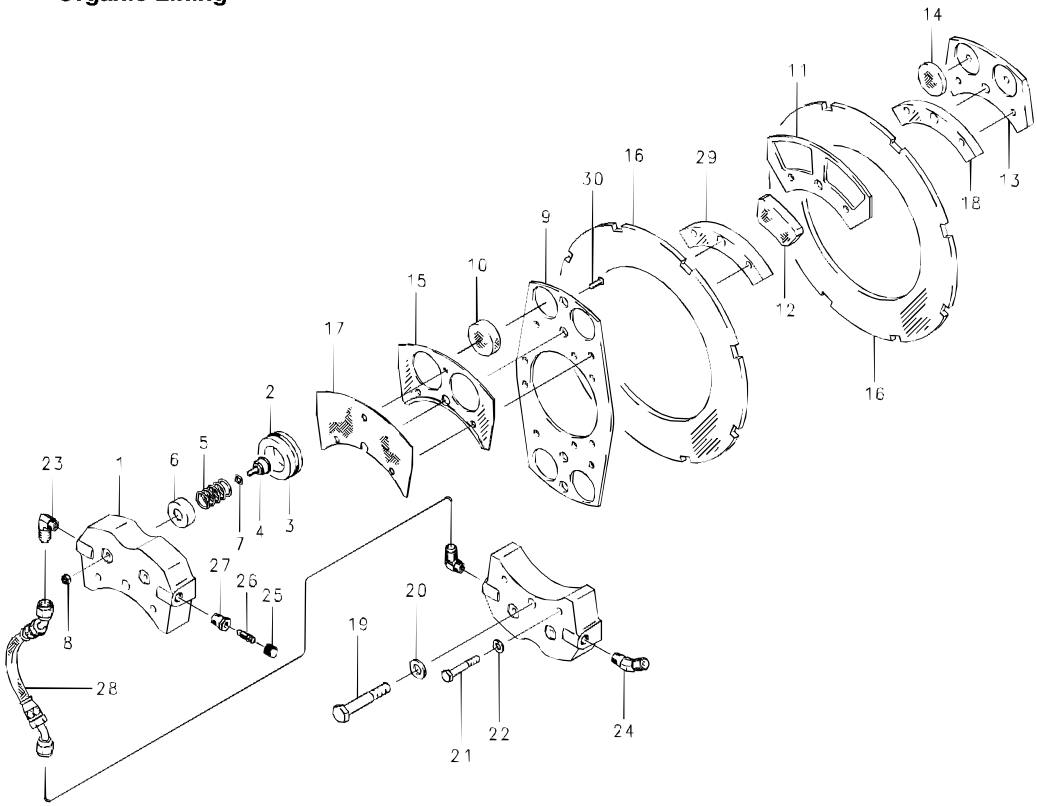

30-31

Organic Lining

FIG.	PART NUMBER	DESCRIPTION	QTY. PER ASSY. A
	091-02000	Cylinder Assy.	2
1	061-01500	Cylinder	2
	092-01300	Piston Assy.	4
2	062-01201	Piston	4
3	101-02500	O-Ring (MS28775-220)	4
4	202-00101	Bolt-Spring	4
5	082-01400	Spring-Retract	4
6	203-00100	Ring-Friction	4
7	101-00500	O-Ring (MS28775-010)	4
8	094-10200	Nut (NASM21083N3)	4
9	065-02000	Torque Plate	1
10	066-11700	Lining - Torque Plate	4
11	204-00100	Plate-Carrier	2
12	066-11900	Lining -Carrier Plate	4
13	064-01300	Back Plate	2
14	066-11800	Lining - Back Plate	4
15	061-01502	Cylinder Shim	2
16	159-00300	Disc-Brake	2
17	067-00701	Neoprene Shim	2
18	067-00900	Spacer	2
19	103-30300	Bolt (AN6H-25A)	2
20	095-10600	Washer (AN960-616)	2
21	103-12600	Bolt (AN4H-26A)	4
22	095-10400	Washer (AN960-416)	4
23	104-00400	Fitting (MS20822-4D)	2
24	104-00500	Fitting (MS20823-4D)	1
25	183-00100	Cap-Bleeder	1
26	079-00300	Screw-Bleeder	1
27	081-00100	Seat-Bleeder	1
28	207-00600	Hydraulic Line Assy.	1
29	067-00700	Spacer	2
30	102-15100	Screw (MS24672-2)	2

Assy. Number

A) 30-31

NOTE:

(1) Used with 40-46 Wheel Assembly.

4

30-91, 30-103, 30-148

Organic Lining

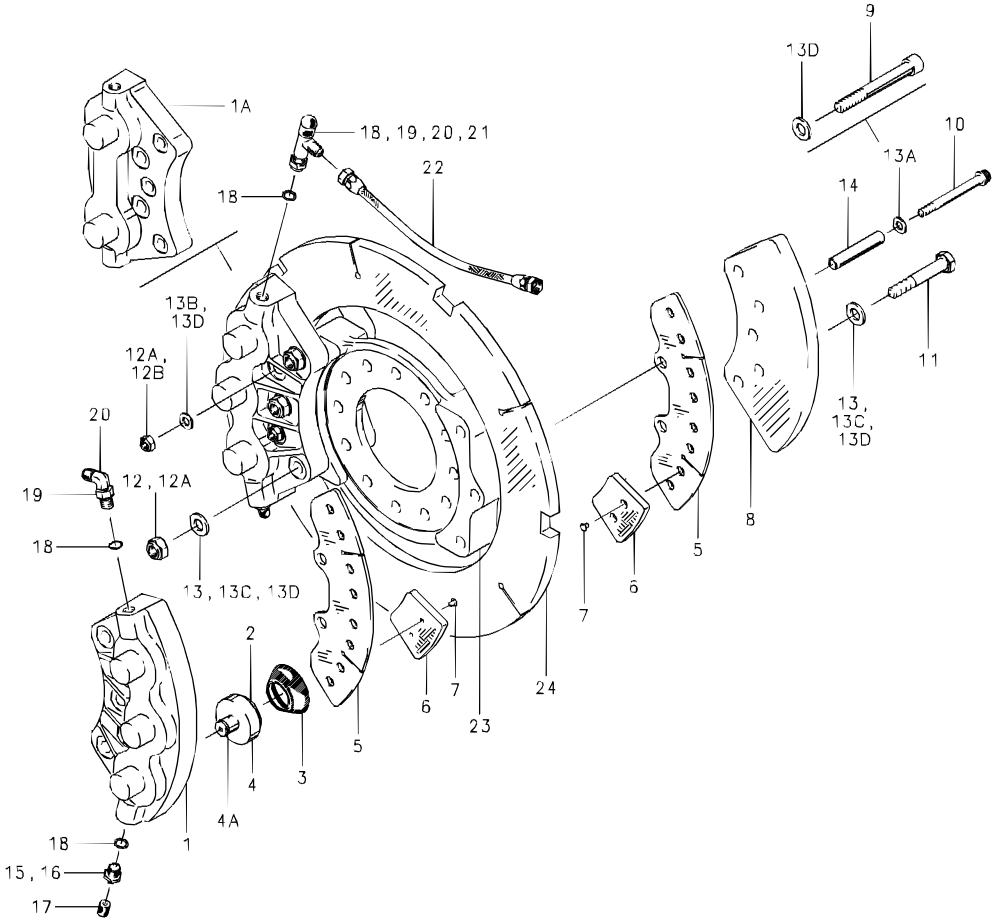

30-91, 30-103, 30-148

FIG.	PART NO.	DESCRIPTION	PER ASSY. 30-91 (1)	30-103 (2) (3)	30-148
	091-06600	Cylinder Assembly	2		
	091-09700	Cylinder Assembly		2	2
1	061-07800	Cylinder (3-piston)		2	2
1A	061-05100	Cylinder (2-piston)	2		
2	101-05200	O-Ring (MS28775-224)		6	6
	101-21500	O-Ring	4		
3	139-02300	Boot-Piston	4	6	6
	092-02500	Piston Assembly	4		
	092-05700	Piston Assembly		6	6
4	062-02400	Piston	4	6	6
4A	082-02000	Friction Spring	4		
	082-05300	Friction Spring		6	6
	073-02400	Pressure Plate Assembly	4		
	073-05400	Pressure Plate Assembly		4	4
5	063-02300	Pressure Plate	4		
	063-04100	Pressure Plate		4	4
6	066-11300	Lining	12	16	16
7	105-00200	Rivet	24	32	32
8	074-02100	Back Plate	2		
	074-03800	Back Plate		2	2
9	069-01100	Anchor Pin	4	4	
10	103-22800	Bolt (MS21250-05048)			4
11	103-30500	Bolt (AN6-30A)	6		
	103-40200	Bolt (AN7-34A)		6	6
12	094-10100	Nut (MS2142-6)	6		
12A	094-12200	Nut (AN365-720)	4	10	6
12B	094-10400	Nut (MS21044-N5)			4
13	095-12400	Washer-Seal	12		
13A	095-02800	Washer (MS20002C5)			4
13B	095-10500	Washer (AN960-516)			4
13C	095-12300	Washer (AN960-716)			12
13D	095-12700	Washer-Seal	8	20	
*	145-02701	Bushing	6		
14	145-08200	Bushing			4
15	081-00200	Seat-Bleeder	2	2	2
16	079-00300	Screw-Bleeder	2	2	2
17	183-00100	Cap-Bleeder	2	2	2
18	101-23000	O-Ring	5		
	101-00700	O-Ring (MS28775-012)		4	4
19	094-90500	Nut (AN924-4D)	3	2	2
20	104-02300	Fitting (AN833-4D)	2	1	1
21	104-02900	Fitting (AN784D4)	1		
	104-02700	Fitting (AN804D4)		1	1
22	207-00500	Hydraulic Line Assembly	1		
	207-01300	Hydraulic Line Assembly		1	1
23	075-10800	Torque Plate Assembly	1		
	075-13300	Torque Plate Assembly		1	1
24	159-00700	Brake Disc	1		
	159-00900	Brake Disc		1	1

Organic Lining

NOTES:

(1) This brake uses automotive type brake fluid.

(2) 30-103 superseded by 30-148.

(3) Inactive assembly – spares support only for parts listed.

* Not illustrated.

4

Notes